THERE IS ALWAYS TIME FOR COURTESY

CONTENTS

INDEX — INSIDE FRONT COVER PAGE

Make SAFETY Your POLICY

The New York Central Railroad Company

LAKE DIVISION
TOLEDO DIVISION
WESTERN DIVISION

Time Table No. 16

FOR EMPLOYEES ONLY

Effective 2:00 A. M. Eastern Standard Time

Effective 1:00 A. M. Central Standard Time

Sunday, October 25, 1964

A. J. WAYNE
Transportation Superintendent
Lake Division

G. C. ELLERT
Transportation Superintendent
Toledo Division

D. G. BOOMER
Transportation Superintendent
Western Division

A. S. GILMAN INC., CLEVELAND

INDEX

—A—

Page

Air Brakes ... 17
Attention Train and Engine Crews ... 3
Automatic Block Signal System (505) ... 15
Automatic Interlocking (663b) ... 16
Automatic Train Stop ... 19

—B—

Bulletin Boards and Books (109) ... 12-13

—C—

Clearing of Trains (83d) ... 5-6
Controlled Sidings ... 12

—D—

Designation and Use of Main Tracks (D-151) ... 13-14
Diesel Equipment ... 17
Division Officials ... 29
Doctors ... 1-2
Draw Bridges ... 8

—E—

Electric Zone (M-2) ... 4
Emergency Signals at Interlockings and other Points (13) 5
Engine Whistle and Bell (31) ... 5
Engine and Car Restrictions (No. 6 Turnout) ... 24-25-26
Entering or Crossing Main Track (513) ... 15
Extra Trains (S-97) ... 7

—F—

Fatalities ... 18
Flat Wheels on Passenger Equipment ... 18

—G—

Grade Signals (291) ... 15

—H—

Hand Brake Test ... 17
Hand, Flag and Lamp Signals (12) ... 5
Handling Trains on Grade ... 19
Heating, Lighting, Ventilation and Air Conditioning of Cars ... 16
Hospitals ... 2

—I—

Interlocking Limits (605) ... 15

—L—

Laws and Regulations (B-2) ... 4
Leaving Cars on Side Tracks (705) ... 16
Lubrication and Care of Journal Boxes ... 17-18

—M—

Make-up of Passenger, Mail, Express and Deadhead Equipment Trains (824) ... 16
Map, Lake Division (Erie Subdivision) ... 54
Map, Lake Division (Cleveland Subdivision) ... 55
Map, Toledo Division ... 56
Map, Toledo Terminal Subdivision ... 57
Map, Western Division ... 58
Markers (19) ... 5
Movements Against the Current of Traffic (D-93a) ... 7
Movement of Trains by Block Signals ... 14
Movement of Trains by Time Table and Train Order Only ... 14-15

—N—

Normal Position of Switches (104a) ... 10-11

—O—

Oculists ... 2
Other Railroads (A-1) ... 4
Overhead Clearances ... 27-28

—P—

Protection of Train Within Yard Limits (S-93) ... 7
Public Crossings at Grade (103) ... 8-9-10

—R—

Rail Detector Car and Clearance Car X 8016 ... 18
Rail Diesel Cars, Class RDC ... 17
Railroad Crossings at Grade (98) ... 7-8

Page

Railroad Grade Crossing Signals (297) ... 15
Radio Stations at Fixed Locations (752) ... 16
Remote Control Switches and Signals (663a) ... 15-16
Rules, New, Modified and Deleted ... 4

—S—

Schedule
Buffalo to Chicago—First Class ... 30-31-32
Chicago to Buffalo—First Class ... 33-34-35
Buffalo to Chicago—Symbol Freight Trains Westward 51
Chicago to Buffalo—Symbol Freight Trains Eastward 52
Stanley Tower to Alexis—Symbol Freight Trains Northward and Southward ... 53
Youngstown to BV—Symbol Freight Trains All Directions ... 53
Ashtabula to Youngstown ... 36
Jefferson Jct. to Jefferson ... 36
CP14 to Oil City ... 36
QD to Belt Jct. via CSL ... 37
Brady to Marcy ... 37
Dunkirk to Titusville ... 37
Polk Jct. to Rose ... 37
CP52 to Ferrona ... 37
Braceville to Dillonvale ... 38
Stanley to Alexis ... 39
Alexis to Stanley ... 39
Toledo to Hudson ... 40
Osseo to Elkhart ... 40
Elyria Jct. to Millbury Jct. ... 40
Fort Wayne to Waterloo ... 40
Waterloo to Hillsdale ... 40
Fort Wayne Jct. to Jackson ... 40
Goshen to Shipshewana ... 40
Grosvenor to Morenci ... 41
Lenawee Jct. to Ida ... 41
Lenawee Jct. to Manchester ... 41
Hillsdale to North Adams ... 41
Jonesville to Litchfield ... 41
Porter to Ivanhoe ... 41
East Gary to Joliet ... 41
Ladd Jct. to Churchill ... 41
Elkhart to Mishawaka via E&W ... 41
JK to Ladd Jct. ... 42
Sidings (105) ... 11-12
Signals—Omission of Green Signals (20a) ... 5
Omission of White Signals (21a) ... 5
Special Use of Tracks ... 26-27
Speed Restrictions—General ... 20
Speed Restrictions—Lake Division ... 20-21
Speed Restrictions—Toledo Division ... 22-23
Speed Restrictions—Western Division ... 23
Speed Restrictions—Wrecking Cranes ... 24-25
Speed Table ... Inside Back Cover Page
Spring Switches (104e) ... 11
Standard Clocks (3) ... 4-5
Standard Time (1) ... 4
Stations Office Calls and Office Hours:
Main Line ... 43-44-45
Lake Division Branches ... 45-46-47
Toledo Division Branches ... 47-48-49
Western Division Branches ... 49-50
Stop Signs ... 15
Switch Targets (294) ... 15

—T—

Take Siding Signal (293) ... 15
Train Inspection Signals ... 16
Train Order Signals (221) ... 14
Train Registers (83) ... 5
Trains Taking Siding (S-88) ... 6

—U—

Use of Signals (28) ... 5

—Y—

Yard Limits (93) ... 6-7

COMPANY SURGEONS

ALLIANCE, O.	Robert G. King, 1401 South Arch Ave. Phone TA 1-0201
ANGOLA, N. Y.	Lee R. Sanborn, 32 High St. Phone 549-3353
ARCHBOLD, O.	E.R.& C. F. Murbach, 224 N. Defiance St. Phone 2015
ASHTABULA, O.	Orville J. Lighthizer, 334 Center St. Phone 992-6116 William F. Davis, 2125 Lake Ave. Phone 997-4366
BEREA, O.	Robert H. Lechner, 10 Beech St. Phones—Office BE 4-6401 Residence BE 4-7388
BLUE ISLAND, ILL.	A. B. Snider, 12840 Mozart St. Phone FU 5-0109 J. F. Van de Roovaart 12757 S. Western Ave. Phone FU 8-0325
BRYAN, O.	Russell K. Ameter, Cameron Hospital Phone Office 636-1131. Res. 636-2148
CAMPBELL, O.	E. J. Reilly, Robinson Road and Madison St. Phone PL 54116
CHICAGO, ILL.	E. A. Hamilton, 607 LaSalle St. Station Phone WA 2-4200, Ext. 402, 569 J. L. Keeley, Mercy Hospital Phone VI 2-3991 James E. Davia, 607 LaSalle St. Station Phone WA 2-4200, Ext. 402 Ray S. Westline, 2652 West 59th St. Phone PR 6-5577 H. E. Turner, 14 East Jackson Blvd. Phone HA 7-4135 (Cases should be sent to his office when Dr. Hamilton or Dr. Davia is not available.) Samuel Garrick, 4130 S. Halsted St. Phone YA 7-2873 J. F. Curry, 7141 Jeffery Ave. Phone HY 3-6096 Also 151 East Randolph St. Phone WA 2-4811, Ext. 499
CLEARFIELD, PA.	J. H. Woolridge, 215 East Locust St. Phone 149
CLEVELAND, O.	H. D. Fowler, 18599 Lake Shore Blvd. Phone KE 1-8500 Hudson D. Fowler, Jr., 18599 Lake Shore Blvd. Phone KE 1-8500 L. J. Blair, 7405 Detroit Ave. Phone WO 1-5758 Wm. F. Sorer, 577 East 152nd St. Phone 771-5000 D. J. Coburn, 18599 Lake Shore Blvd. Phone KE 1-8500 Wm. E. Mishler, Republic Bldg. (C.U.T. Employees) Phone CH 1-8400 Lincoln C Dickey, 18599 Lake Shore Blvd. KE 1-8500 (Ears, Nose and Throat) Val J. Mastny, 421 Republic Bldg. Phone MA 1-4133 (Ears, Nose and Throat)
CONNEAUT, O.	J. Frank Docherty, 321 Main St. Phone 595-1911
DUNKIRK, N. Y.	John F. Foss, 77 East 4th St. Phone EM 6-2700
DWIGHT, ILL.	Edward F. Joss, 106 S. Franklin St. Phone 584-3068
EAST CHICAGO, IND.	Edward A. Campagna, 3406 Guthrie St. Phone EX 7-0125 J. A. Teegarden, Jr., 1919 E. Columbus Drive Phone EX 7-1805
ELKHART, IND.	Galen R. Miller 403 Ninth St. Phone: Residence JA 4-0322 and Office JA 4-0313 The Industrial Clinic, 506 S. Second Street Phone JA 3-4206 S. T. Miller G. R. Bloom B. E. Kintner D. D. Swihart
ELYRIA, O	R. J. Emslie 405 Elyria Savings & Trust Bldg. Phone FA 2-5920
ERIE, PA.	Joseph M. Walsh, 702 West 8th St. Phone GL 2-2896 Francis J. Brinig, 2620 Sigsbee St. Phone GL 2-2087
FORT WAYNE, IND.	Robert Brosius, 1603 Wells St. Phone A 3230
FRANKLIN, PA.	Donovan C. Blanchard, 1122 Liberty St. Phone 432-5560
GARY, IND.	R. N. Bills, 504 Broadway Phone 885-6106 C. O. Almquist, 504 Broadway Phone 886-9331
GOSHEN, IND.	Floyd S. Martin, 127 East Lincoln Ave. Phone KE 3-2979
HAMMOND, IND.	K. J. Long, Medical Building 30 Douglas St. Phones WE 2-3938, 2-3939 A. C. Remich, Medical Building 30 Douglas St. Phones WE 2-3938, 2-3939
HILLSDALE, MICH.	W. W. Sawyer, 61 North Howell St. Phone HE 7-4230
HUBBARD, O.	Bernard M. Schneider, 20 W. Liberty St. Phone KE 41978
HURON, O.	C. E. Swanbeck, Homan and Center Sts. Phone 433-5222
JACKSON, MICH.	E. A. Thayer, 1104 Jackson National Tower Bldg. Phone ST 2-3672 Ennis H. Corley, 1401 Reynolds Bldg. Phone ST 2-7133
JOLIET, ILL.	L. J. Heintz, 58 North Chicago Street. Phones—Office SA 2-8508; Residence SA 6-6986
KANKAKEE, ILL.	E. S. Hamilton, 147-151 N. Schuyler Ave. Phone—Office 932-6431 Chas. Allison, 1309 East Court St. Phone 933-2221
KENDALLVILLE, IND.	F. W. Messer, 115 East Rush St. Phones—Office 347-1452; Residence 347-0930
MINERVA, O.	P. S. Whiteleather, 106 South Main St. Phone 868-4245
NEW CARLISLE, IND.	J. E. Luzadder, 105 W. Michigan St. Phone 654-3631
NORTH EAST, PA.	E. G. Shelley, 59 West Main St. Phone 11
NORWALK, O.	C. B. Thomas, 257 Benedict Ave., Norwalk Professional Colony Phone 662-4561
PAINESVILLE, O.	M. G. Carmody, 54 North St. Clair Phone EL 4-3737

COMPANY SURGEONS—Continued

PORT CLINTON, O.	Cyrus R. Wood, 115 Madison St. Phone 4501
RIVERDALE, ILL.	J. A. Kollar, 68 East 138th St. Chicago, Ill. Phone IN 8-9718
SANDUSKY, O.	H. B. Frederick, 116 W. Madison St. Phone 625-9717-Res. 626-0728 D. D. Love, 116 W. Madison St. Phone 625-9717-Res. 626-1636
SILVER CREEK, N. Y.	C. S. Barresi, 195 Central Ave. Phone YE 4-3570
SOUTH BEND, IND.	P. J. Birmingham, 426 Sherland Bldg. Phone CE 3-2476
STREATOR, ILL.	D. Oris Conley, 223 East Main St. Phone 2-2224
TOLEDO, O.	Frank E. Foss, 316 Michigan Ave. Phone 243-1105
	George N. Bates, 316 Michigan Ave. Phone 243-1105
WARREN, PA.	Quay A. McCune, 514 Third Ave. Phone 336-J
WESTFIELD, N. Y.	Van S. Laughlin, 56 Portage St. Phone FA 6-3621
YOUNGSTOWN, O.	W. B. Turner, Medical Center, Gypsy Lane Phone RI 7-9114
	C. Stefanski, 901 Mahoning Bank Bldg Phone RI 3-6509
	E. A. Shorten, 420 Oak Hill St. Phone 744-4344

OCULISTS

ASHTABULA, O.	T. F. O'Connor, 4634 Main St. Phone 993-3841
	Carl J. Streicher, 217 Park Place Phone 992-6941
CHICAGO, ILL.	A. G. Peters, 7856 S. Ashland Ave. Phone RA 3-1800
CLEVELAND, O.	Myron Volk, 18599 Lake Shore Blvd. Phone KE 1-8500
	Val J. Mastny, 421 Republic Bldg. Phone MA 1-4133
ELKHART, IND.	The Industrial Clinic, 506 S. Second Street Phone JA 3-4206
ERIE, PA.	James H. Delaney, 138 West 9th St. Phone GL 2-3788
FRANKLIN, PA.	Chester A. Nordstrom, 308 Exchange Bank Bldg Phone 25817
HAMMOND, IND.	Arthur J. Kuhn, 112 Rimbach Street Phone WE 2-0435
JACKSON, MICH.	W. Edward McGarvey, 161 West Michigan Ave. Phone Office ST 3-6935-Res.ST. 2-3945
LAGRANGE, ILL.	G. H. Mundt, Jr., 47 S. Sixth Ave. Phone FL 4-2580
SOUTH BEND, IND.	J. V. Cassady, 815 Sherland Building Phone CE 2-6973
YOUNGSTOWN, O.	W. H. Evans, 510 Dollar Bank Bldg. Phone RI 4-2147

HOSPITALS

ADRIAN, MICH.	Emma L. Bixby Phone CO 5-6161
ALLIANCE, O	Alliance City, 207 East College St. Phone TA 1-1000
ASHTABULA, O.	Ashtabula General Hospital 2420 Lake Ave. Phone WY 2-3112
CHICAGO, ILL.	Mercy, 2537 Prairie Ave. Phone VI 2-4700
	St. Bernard, 6337 Harvard Ave. Phone TR 3-8200
CLEVELAND, O.	Lutheran, 2609 Franklin Ave. Phone PR 1-4200
	Euclid Glenville, 101 East 185th St. Phone KE 1-9000
DUNKIRK, N Y.	Brooks Memorial Hospital 10 West 6th St. Phone EM 6-1111
EAST CHICAGO, IND.	St. Catherine, 4321 Fir St. Phone EC 3080
ELKHART, IND.	Elkhart General, 1100 South Boulevard Phone 3-5350
ELYRIA, O	Memorial Phone FA 3-3221
ERIE, PA.	St. Vincent's Hospital 2420 Sassafras St. Phone GL 2-6811
FORT WAYNE, IND.	St. Joseph's Phone A-4121
GARY, IND.	Mercy, 540 Tyler St. Phone TU 6-9131
	Methodist, 1600 West 6th St. Phone TU 3-0491
HAMMOND, IND.	St. Margaret, 25 Douglas St. Phone WE 2-2300
HILLSDALE, MICH.	Hillsdale Phone HE 7-4451
JACKSON, MICH.	W. A. Foote Memorial Phone 7131
KANKAKEE, ILL.	St. Mary, 192 South 5th Avenue Phone 3-4451
	Riverside, 350 North Wall St. Phone 933-1671
LA PORTE, IND.	Holy Family, 205 E St. Phone 3151
SANDUSKY, O.	Providence Phone 625-8450
SOUTH BEND, IND.	St. Joseph, 401 North Notre Dame Ave. Phone CE 4-2151
STREATOR, ILL.	St. Mary, 615 Bloomington St. Phone 2-2147
STURGIS, MICH.	Sturgis Memorial Phone 984
TOLEDO, OHIO	St. Vincent Phone CH 1-8161
YOUNGSTOWN, O.	Youngstown Hospital Association South Side Phone RI 7-0751

ATTENTION

TRAIN AND ENGINE CREWS

Always keep in mind that the customer is the **BUYER** and that it is your job to make every **BUYER** a satisfied customer. To that end, the following matters deserve your constant attention:

1. If an error or misstatement has been made somewhere along the route, put forth every effort to correct it. Nothing should be considered too trivial.

2. Ever be alert to the safety and comfort of your passengers, and freely give information and advice when requested. The aged, infirm and the young passenger traveling unaccompanied require special attention. Be helpful to them in every way possible, particularly in assisting them on and off trains, and occasionally inquire as to their comfort.

3. Protect both coach and sleeper passengers against undue noise or disturbance, particularly at night. Remember they pay to sleep.

4. The avoidance of arguments or friction with passengers is a test of your diplomacy. A calm and pleasant manner, regardless of the circumstances, is the best assurance of your success.

5. Keep posted on connecting line train service, arbitrary holds they have in effect for our trains, and advise passengers so as to avoid, as far as possible, any uneasiness on their part about missing connections, and when same is unavoidable, tell them what time the next connection is due to depart.

6. Cheerfully offer explanation of unusual delays and pass such information to other members of your crew—Brakeman, Porter, Sleeping Car, Pullman and Dining Car employees—so they too may advise passengers and when practicable RPO clerks. Generally speaking, passengers will gladly accept a condition which they understand, but on the contrary are irritated when kept in ignorance.

7. Neatness of appearance and courtesy bespeak pride in your job, and create good-will for the Railroad.

8. Being considerate of others is the key to popularity. This applies to the institution and individual alike. Many of your passengers may be riding a train for their first time. This is especially true of the younger generation. Kind and attentive treatment to make them feel at home creates additional passenger traffic.

9. Remember that people traveling on passes have a right to that privilege, and are entitled to the same courteous treatment as other passengers. A satisfied "free-transportation" passenger is always a booster.

10. On crowded trains, New York Central employees riding on passes should, and will if properly approached, cheerfully cooperate in seeing that revenue passengers are given every possible consideration.

11. Train Porter should keep coaches clean and in tidy condition at all times. Toilets particularly are the source of adverse comment. Inspect them frequently.

12. **AVOID ROUGH HANDLING OF YOUR TRAIN.** New York Central enginemen have an enviable reputation for smooth starting, running and stopping of their trains. Never lose sight of this feature, as passengers are more disposed to avoid the route that does not give them a smooth ride, than they are to exert the effort involved in registering complaints about it.

13. Of equal importance is **SMOOTH HANDLING OF FREIGHT TRAINS.** Rough handling results in damaged lading and delays due to damaged equipment, which creates dissatisfied customers.

14. On-Time delivery of passengers, mail, express and freight at destination is what the customers pay for and expect. Your best efforts, always within the zone of safety, should be extended to keep your trains on time.

SPECIAL INSTRUCTIONS

Special instructions prefixed by letter or number relate to or modify a rule or portion of a rule of the Rules of the Operating Department with corresponding letter or number unless otherwise specified.

A. Supplement No. 1 of Rules of the Operating Department is in effect October 25, 1964 and contains revisions and modifications of Rules of the Operating Department and new rules adopted after October 28, 1956.

Revised Rules: B-2, G, H, K-1, L-1, M, 3b, 11, 11a, 11b, 15, 18, 19, 26, 33, 34, S-90, 91a, 92, S-93, D-93a, 99, 101a, 103a, D-152, 109, 206a, 210, 211, 211a, 223, 281D, 512, 513, 514, 616a, 701, 703, 715, 877, 920, 927, 933, 938, 939.

Modified Rules: Definitions, 12, 14, 16, 104, 293, 295, 300, 317, 342.

New Rules: L-2, O, 11c, 296, 296A, 296B, 750, 751, 752, 753, 754, 755, 756, 921. Train Order Form Z. Additional Signal Aspects and Indications, Siding and Yard Switch Targets, Siding Derail Targets, Temporary Speed Board.

Rules deleted: 33a, 100, 940, 942.

A.1 The title Transportation Superintendent will be used instead of Superintendent.

OTHER RAILROADS.

Lake Division

Between: Mile Posts 78.9, 2.3 miles East of Franklin, Pa. and 80.0, 3.4 miles East of Franklin, Pa. Trains run via EL.

NYC Jct., Youngstown, East Youngstown, and Struthers trains run via P&LE.

Minerva and Brady, trains run via P.R.R.

Painesville and Morton Salt Company, trains run via B&O.

DB and Harvard Ave., Cleveland, trains run via P.R.R.

West 73rd Street and Coal Dock Yard, Cleveland, trains run via Nickel Plate W&LE District.

Toledo Division

Trains and engines operate via C&O and TT Ry. between Rockwell Junction and SA. C&O time table governs between Rockwell Junction and Walbridge; TT Ry. time table governs between Walbridge and SA. Between SA and SO Ohio Central Division time table governs.

NYC yard engines, with or without cars, moving to or from Nickel Plate Yard, must obtain permission from the Nickel Plate operator at MC Junction before occupying Nickel Plate main track between Nickel Plate Yard and Field Ave.

On Westward trip, such permission can be obtained by use of yard telephone located at Field Ave.

NYC and Nickel Plate trains or engines making movements between the home signal at CP 288 and the Junction switch at Field Ave., must proceed expecting to find the track occupied.

Employees of the New York Central Railroad, while in service at the Lakefront Dock & Railroad Terminal Company, will be governed by New York Central Operating Rules and Special Instructions.

Trains and engines making movements between Andrus Road, north of Yard E, Stanley, and Miami Street will operate via Pennsylvania R.R. Yard tracks.

Toledo Division trains via Old Road Branch will operate over Jackson-Elkhart Branch of Northern District between White Pigeon Jct. and B, Elkhart.

Western Division

Between: Portage Ave. overhead and Notre Dame, South Bend, via Michigan Division.

Indiana Harbor and Osborn, Ivanhoe and Kensington, and between Calumet Park and Blue Island, via IHB.

Chicago and 61st St., NYC and CRI&P Joint Instructions No. 3 govern.

NYC Jct. and Zearing, trains run via CB&Q.

West K&S Switch, Kankakee, and Aroma Park Indiana Division time table governs.

On joint CRI&P—Western Division section at Joliet, interlocking signal will display CRI&P aspects.

Osborn and Hartsdale, Indiana Division time table governs.

B-2. LAWS AND REGULATIONS.

Reports.

When car of live stock is due to be fed, rested and watered within 3 hours, the conductor must send report to the Transportation Superintendent by wire.

Defective Cars

Cars becoming defective enroute when loaded with live stock or perishable freight may be hauled by chains instead of couplers to next repair point, and when so hauled at the rear of caboose, must be chained in addition to being coupled unless the air brakes are in service.

Other defective cars must not be hauled by chains in revenue trains or in association with cars commercially used, beyond the first side track.

Ohio.

At railroad crossings and junctions at grade, not interlocked, all trains must come to a full stop, not nearer than two hundred (200) feet, nor farther than eight hundred (800) feet from the crossing, and shall not cross until signalled to do so by the watchman, nor until the way is clear.

Within the State of Ohio, when a pusher or helper engine is used to assist and assemble train and the pusher or helper engine is located behind the caboose, employees are prohibited from riding in or on the caboose while train is being assisted.

M-2 ELECTRIC ZONE

Western Division

Terre Coupee; Entire length of CSS&SB receiving and delivery tracks.

1. STANDARD TIME.

Eastern Standard Time is in use on the Lake and Toledo Divisions. Central Standard Time is in use on the Western Division.

3. STANDARD CLOCKS.

Lake Division

Dunkirk	Passenger station.
Wesleyville	Engine Dispatcher's office.
Ashtabula	Engine Dispatchers' office. West Yard office.
East Youngstown	YMCA
Youngstown	McGuffey St. Yard Office
Stoneboro	Agents office.
Sutton	Agents office.
Collinwood	Crew dispatcher's office, NYC Dormitory. Engine dispatcher's office. Diesel Electric Terminal, General foreman's office.
Rockport	East and West Yard Office.
DK	Yard office.
Cleveland Union Terminal	Crew dispatcher's office. CUT telegraph office
Minerva	MI office. Diesel Facilities.

Toledo Division

Elyria	Yard office.
Sandusky	Ticket office. Yard office.
Toledo	Train dispatcher's office TOL. telegraph office. Baggage room
Air Line Jct.	Register Clerk's office.
Stanley	Telegraph office.
Adrian	Station.
Hillsdale	Station.
Fort Wayne	Station.

Western Division

Elkhart	B. Passenger station Engine house, north side of hump. Hump Yard office. Dormitory.
Englewood	Engine house. Trainmaster's office
South Bend	General yard master's office.
Kankakee	Register Room. Telegraph office.
Joliet	Telegraph office

12. HAND, FLAG AND LAMP SIGNALS.

Lake Division

Ashtabula:

A blue signal, displayed from OD to westward freight trains only, indicates stop is to be made at CP130 to leave or take cars. When blue signal is not displayed to trains having cars to leave at Ashtabula, cars are to be left on north siding.

A double blue signal displayed from OD to westward freight trains only, indicates stop is to be made at Hill Track, Painesville, Ohio, to leave or take Perry cars.

Collinwood Yard:

Westward trains or engines enroute to westbound yard will not proceed west of crossovers between tracks 7 and 8 east of Dille Road until proceed hand signal is received from switchtender located at Dille Road, who will use yellow flag by day and yellow light by night.

Eastward trains or engines enroute to eastbound yard will not proceed east of East 152nd St., until proceed hand signal is received from switchtender located at East 152nd St., who will use yellow flag by day and yellow light by night.

Trains or engines using yard lead in either direction will be governed by hand signal from switchtender located at East 152nd St.

Yard Track Indicators are in service at QD Int., Collinwood located approximately three hundred (300) feet east of QD Tower between No. 4 track Cleveland Short Line and No. 1 main track.

Indicator will display track to be occupied by eastbound trains entering the westbound yard at Collinwood.

N—For North Main.
1—For No. 1 Lead.
2—For No. 2 Lead.
3—For No. 3 Lead.

Employee to line the route over the hand operated switches for the track indicated.

13. EMERGENCY SIGNALS AT INTERLOCKINGS AND OTHER POINTS.

Whistle or horn signals located at:

Lake Division

OD, QD, CT, MY, PA, SL, and BE.

Toledo Division

Wabash, Swan Creek, Nasby, Alexis and SA.

19. MARKERS.

Reflectorized markers are in use:

Lake Division except on Main Line, between BV, and CP113; also on Valley, JF&C, Oil City, and Sharon Branches trains must be equipped with other than reflectorized markers.
Toledo Division
Western Division

20a. OMISSION OF GREEN SIGNALS.

The display of green signals will be omitted except for NYC trains on the Joliet Branch and NYC Kankakee Branch trains between CP WG and NYC Jct.

21a. OMISSION OF WHITE SIGNALS.

The display of white signals will be omitted except for NYC trains on the Joliet Branch and NYC Kankakee Branch trains between CP WG and NYC Jct.

28. USE OF SIGNALS.

Western Division

Flashing lunar white light at signal 515.2 west of Gary and at eastward home signal located west of Michigan Division crossing South Bend will indicate to passenger trains scheduled to stop on signal to receive passengers that there are passengers to be received.

31. ENGINE WHISTLE AND BELL.

Enginemen will not sound whistle, except in emergency at the following locations:

Lake Division

Warren

Toledo Division

Vermilion
Toledo

Western Division

Elkhart, MP 418.7 to MP 423.4.
MP 439, South Bend to signal 446 at Mishawaka.
La Porte between WR and JD

Whiting	117th Street Front Street

Gary (Porter Ivanhoe Branch) MP 240.7 to MP 252.1.
Chicago Heights MP 21.0 to MP 23.0 except East End Avenue and Halsted Street Joliet Branch.

83. TRAIN REGISTERS.

Lake Division

Cleveland Union Terminal—CUT Telegraph Office.
Valley Branch—Dunkirk and Warren.
Oil City Branch—Stoneboro, Agents office.
Alliance Branch—Minerva, *Alliance and Newton Falls.
*Conductors must register arrival of their train at Alliance

Toledo Division

*Elyria	Yard Office.
*Fremont, O.	Phone box on pole 1,000 feet west of State Route No. 20.
Toledo	Baggage room.
Stanley	Telegraph office.
*Grosvenor	Phone box.
Lenawee Jct.	Phone booth.
Tecumseh	In box on post at W. Patterson St.
Adrian	Crew Room.
Hillsdale	Station vestibule.
Hanover	Box at derail south end of siding.
Middlebury	Box at former station.
Angola	Box at former station.
Waterloo	Phone box at station.

*Eastward second class trains will register.

Trains will register at terminals, except

Swan Creek	Eastward Old Road trains entering inbound track at Vulcan will stop clear of Dorr Street and conductor report arrival to signalman at Swan Creek by telephone, identifying his train, giving his name and time cleared.

Western Division

#JK	Telegraph office.
#North Judson	Telegraph office.
Kankakee	Register room.
*Streator	Telegraph office.
#Illinois River	Telegraph office.
Joliet	Telegraph office.

#Trains will be registered by operator at JK and North Judson. During the hours North Judson is closed it will not be necessary for trains to stop at North Judson to register.

*Trains will be registered by operator at Streator during the hours the office is open and will be registered by conductor during the hours the office is closed.

83d. CLEARING OF TRAINS.

On two or more tracks, trains will be cleared at initial stations by signal indication, except as follows:

Lake Division

East Youngstown, West Yard: Verbally by operator at RS.

CUT Telegraph Office, Cleveland: Passenger, Mail and Express trains will be cleared by Operator as follows:
Nickel Plate, Ohio, Lake and Toledo Division trains originating at points other than Cleveland Union Terminal; verbally by telephone. Dial 6357.

Buckeye Road and Kingsbury Yard; Trains or engines when authorized verbally by signalman at QD.
Kingsbury Yard—Trains or engines must report arrival to signalman at QD.

Toledo Division

Toledo: B&O, C&O, and NYC passenger trains verbally by operator TOL telegraph office.

Western Division

Elkhart.....Eastward first class trains will be governed by signal indication. Westward first class trains will not depart Elkhart Station until receiving permission from operator at B by telephone.

Robert R. Young Yard.Westward freight trains will not depart westbound departure yard until receiving permission from operator at B by telephone located in car inspector's shanty at extreme west end of westbound departure yard. Eastward Toledo Division freight crews must telephone operator at HHH Elkhart for clearance before departing.

Olivers Yard.....Eastward freight trains by telephone by signalman at HF.

East Gary.....Eastward Joliet Branch trains moving to the main track of the Porter-Ivahoe Branch must receive permission from signalman at Tolleston before fouling main track and to pass home signal governing this movement.

Westward Joliet Branch trains will receive their train orders and Clearance Form A from Willow Creek. On arrival at East Gary, must obtain permission from signalman at Tolleston before making crossover movement to the Joliet Branch.

Ivanhoe ..... Eastward trains coming off IHB by interlocking signal

Trains will be cleared on single track as follows:

Lake Division

At following locations need not obtain Clearance Form A:
Titusville.....Northward.
Newton Falls.....Southward second class trains.
Alliance.....Southward second class trains.

Toledo Division

At following locations need not obtain Clearance Form A:
Elyria Jct.....Norwalk Branch trains.
Fremont, O.....Westward second class trains.
Millbury Jct.....Norwalk Branch trains.
Lenawee Jct.....Northward first class trains.
Westward first class trains.
Eastward second class trains.
Tecumseh.....Southward first class trains.
Adrian.....Eastward first class trains.
Hillsdale.....First and second class trains.
Ft. Wayne Jct.....Northward first class trains.
Hanover.....Southward first class trains.
Angola.....Northward first class trains.
Waterloo.....Southward first class trains.
Fort Wayne.....Northward first class trains.
Goshen.....Eastward first class trains.
Middlebury.....Westward first class trains.
White Pigeon.....Eastward second class trains.

Western Division

NYC Jct.....Eastward trains verbally from operator at Illinois River by telephone.

Schneider.....Eastward freight trains doing work in yard verbally from operator.

*Hartsdale.....Eastward trains doing work in yard verbally from operator.

Kankakee.....Trains, yard cuts or engines must obtain permission verbally from operator at West Yard, Kankakee before moving from K&S Branch to Western Division main track.

Eastward Indiana Division trains, or engines, when ready to depart west yard, Kankakee, will get verbal clearance from operator at west yard.

*Applies only during office hours.

Trains will not leave the following stations without clearance Form A:

Lake Division

Dunkirk and Warren..Valley Branch
Stoneboro.....Oil City Branch.
Minerva.....Alliance Branch.
Cleveland.....Ohio Division Trains, except trains originating at points other than Cleveland Union Terminal.
EL Trains EL Clearance Form A.

Toledo Division

Swan Creek.....Westward Old Road freight trains.
Adrian.....Ida, Morenci and Manchester Branch trains.
Hillsdale.....Extra trains.
Fort Wayne.....Northward extra trains.

Western Division

#HHH.....Eastward Indiana Division trains.
JK.....Westward trains.
Kankakee.....Western Division trains.
Illinois River.....Eastward trains.

Eastward CMStP&P trains must obtain permission from operator at Illinois River by telephone before entering NYC main track at Seatonville and must report clear of NYC main track at Granville Jct. to the operator at Illinois River by telephone.

Westward CMStP&P trains must obtain permission from operator at Illinois River by telephone before entering NYC main track at Granville Jct. and must report clear of NYC main track at Seatonville to the operator at Illinois River by telephone.

Eastward C&NW trains must receive permission from operator at Illinois River by telephone before entering NYC main track at Ladd Jct. and must report clear of NYC main track at Seatonville Jct. to operator at Illinois River by telephone.

Westward C&NW trains must receive permission from operator at Illinois River by telephone before entering NYC main track at Seatonville Jct. and must report clear of NYC main track at Ladd Jct. to the operator at Illinois River by telephone.

Eastward, Western Division trains, after having received Clearance Form A, will, when ready to depart west yard, Kankakee, get clearance from operator at west yard by telephone.

#Eastward Indiana Division trains will receive clearance form A from HHH Telegraph Office before departing Robert R. Young Yard, Elkhart.

S-88. TRAINS TAKING SIDING

Lake Division

Stoneboro: Trains desiring to use siding must first obtain permission from operator at Stoneboro.

93. YARD LIMITS.

Lake Division

Dunkirk.
Between Dunkirk and Fredonia incl.
Between Wesleyville, and MP 94 incl.
Between Ashtabula Harbor, Ashtabula and Carson incl.
Between Jefferson Jct. and Jefferson.
Falconer.
Between North Warren and Warren, incl.
Titusville.
Dorset Jct. and Dorset.
Andover.
Between Branch, Stoneboro and Sandy Lake incl.
Between Franklin and Eclipse incl.
Oil City.
Sutton.
Between Coalburg and Youngstown, incl.
Between Coalburg, Hubbard and Ferrona.
Between MP 168.8 east of BR and Warner, Eastland Rd., Big Four, and Sheldon Rd., Lake Front incl.
Between Newton Falls and Braceville incl.
Between Piney Fork and Dillonvale incl.
Alliance.
Minerva.

Toledo Division

Adrian
Bellevue
Blissfield
Clyde
Coldwater
Deerfield
Elkhart
Elyria-South Lorain incl.
Fremont, Ohio
Fort Wayne Jct.
Fort Wayne to Waterloo incl.
Genoa–Millbury Jct. incl.
Goshen to Shipshewana incl.
Haires
Hillsdale to Jonesville incl.
Hillsdale to Pleasant Lake incl.
Jasper
Jonesville to Litchfield incl.
Jonesville to Horton incl.
Lenawee Jct
Michigan Elevator
Monroeville
Morenci
Norwalk
Quincy
Sandusky
Stanley
Sturgis
Tecumseh to Manchester, incl.
White Pigeon to White Pigeon Jct. incl.
Nasby to CP 285
Vulcan to CP 285
Vienna Jct. to CP 285
Rockwell Jct. to CP 286

Western Division

Chicago Heights
Dwight
East Gary
Elkhart
Elkhart to Mishawaka incl. on E&W Branch
Granville Jct. to Granville, incl.
Hartsdale
Illinois River to NYC Jct.
JN to Englewood, 61st St. incl.
Joliet.
Kankakee.
LaPorte
LX, and NYC Jct. to Churchill incl.
Mishawaka
North Judson.
Portage to Porter incl.
Schneider.
South Bend to JK incl. on the Kankakee Branch.
South Bend between Portage Ave. overhead and Ford St.
Streator Jct. to Streator, incl.

Crews operating out of Twin Branch and Mishawaka when they have heavy train will arrange to stop just west of by-pass U.S. 112 and obtain permission by telephone from B before proceeding into Elkhart.

S-93. PROTECTION OF TRAIN WITHIN YARD LIMITS.

Western Division

South Bend: Trains or engines occupying main track between Arnold St. and JK must be protected against following movements.

D-93a MOVEMENTS AGAINST THE CURRENT OF TRAFFIC.

Movements may be made without train order when authorized by train dispatcher between:

Lake Division

(a) CP4, Carson, and JM Tower, on No. 1 and No. 2 tracks by permission of signalman at OD.

(b) Youngstown NYC Jct. to Valley Street, No. 1 track by permission of signalman at Valley Street.

(c) Between QD and BR No. 1 track by permission of the signalman at QD.

(d) East 131st Street and QD on No. 3 track by permission of signalman at QD.

(e) QD and Double Track, Cleveland, No. 4 track by permission of signalman at DB.

(f) West End 26th Street, Cleveland and DB on No. 2 track by permission of signalman at DB.

(g) Denison Ave. and Clark Ave. on No. 1 track by permission of signalman at Short Line Jct.

(h) Price Brothers Company Switch and Short Line Jct. No. 1 track under supervision of signalman at Short Line Jct.

(i) G. E. Plant, East of Sheldon Road, and East End of Rockport Yard, No. 3 track, under supervision of signalman at Short Line Jct.

(j) Buckeye Road and Woodland Ave. on No. 3 track CSL by permission of the signalman at QD.

(k) Short Line Jct. and Parma on No. 3 track by permission of signalman at PA.

(l) Parma and Short Line Jct. on No. 4 track by permission of signalman at SL.

Toledo Division

(a) Rockwell Jct. and CP 286 on Southward main track by permission of train dispatcher.

(b) CP 286 and Rockwell Jct. on Northward main track by permission of train dispatcher.

(c) Swan Creek and Alexis on No. 1 track by permission of signalman at Alexis.

(d) Alexis and Swan Creek on No. 2 track by permission of signalman at Swan Creek.

Western Division

(a) JN and 61st St., on No. 2 track by signal indication under supervision of signalman at JN.

(b) Portage and PO on No. 1 track by permission of signalman at PO.

(c) American Home Food Products switch and JD on No. 2 track by permission of signalman at JD.

(d) Bendix switch and east switch of eastward siding Mishawaka on No. 2 track by permission of signalman at HF.

(e) Permanent trailing point crossover at Union Street Mishawaka and City Water Works track Mishawaka on No. 1 track by permission of signalman at B.

S-97. EXTRA TRAINS.

Extra trains may be run without train orders:

Lake Division

Between: Hubbard and Ferrona.
Jefferson Jct. and Jefferson
Dunkirk and Fredonia.

Toledo Division

Between Genoa and Millbury Jct.
Tecumseh and Manchester.
Hillsdale and Jonesville.
Jonesville and Litchfield.
Angola and Pleasant Lake.
Horton and Hanover.
Middlebury and Shipshewana.
White Pigeon and White Pigeon Jct.

Western Division

Between: HF and JK.
Churchill and E&W Branches.
Illinois and NYC Jct.

98. RAILROAD CROSSING AT GRADE.

Note: Railroad crossings at grade not protected by interlocking signals are shown under Rule 297.

Location	Railroad	Signals
Lake Division		
CP 85	P. R. R.	Interlocking.
Ashtabula (Main Line)	Youngstown Branch and P. R. R.	Interlocking.
CP 154	B&O	Interlocking.
Dunkirk Yard Valley Branch	P. R. R. & Nickel Plate	Interlocking.
Falconer Jct.	EL	Interlocking.
Ashtabula (Youngstown Branch and P. R. R. Crossing)	Main Line	Interlocking.
Ashtabula	Nickel Plate	Interlocking.
CP 38	EL	Interlocking.
Youngstown: Valley St.	EL	Interlocking.
Youngstown: Yard tracks	EL and B&O	Interlocking.
‡Jamestown	P. R. R.	Interlocking.
‡Amasa	EL	Interlocking.
*Farrell	EL	Interlocking.
Alliance	PRR, Main Line	Interlocking.
Parma	B&O	Interlocking.
Short Line Jct.	NYC	Interlocking.
Toledo Division		
CP207	B&O	Interlocking.
CP240	B&O	Interlocking.
CP242	P. R. R.	Interlocking.
CP285	TT	Interlocking.
Wabash	Wabash	Interlocking.

*Normal position for EL, trainmen will operate interlocking in accordance with instructions posted in phone box.

‡Automatic Interlocking.

Nasby	TT	Interlocking.
K	TT	Interlocking.
Alexis	C&O, Ann Arbor & P. R. R.	Interlocking.
SA	TT	Interlocking.
CP317	Wabash	Interlocking.
CP320	DT&I	Interlocking.
CP341	Ohio Division	Interlocking.
CP358	Wabash	Interlocking.
CP379	P. R. R.	Interlocking.
‡Monroeville	Nickel Plate and B&O	Interlocking.
Bellevue	Nickel Plate and P. R. R.	Interlocking.
Vulcan	TT	Interlocking.
‡Riga (1 Mi. East)	DT&I	Interlocking.
#Adrian	Wabash	Interlocking.
*RK	P. R. R.	Interlocking.
Fort Wayne	Nickel Plate	Interlocking.
	P. R. R.	Interlocking.
Auburn Jct.	B&O, P. R. R.	Interlocking.
‡Steubenville	Wabash	Interlocking.
‡Raisin Center	Wabash	Interlocking.
**Federman	Ann Arbor, normal position for Ann Arbor	Interlocking.

‡Automatic Interlocking.

*During hours office is closed, RK interlocking will be lined for Pennsylvania R.R.

**Federman: Trainmen will operate interlocking.

#Adrian: Trainmen will operate semi automatic interlocking for movements on NYC track.

Western Division

HF	Michigan Division Connection	Interlocking.
Olivers: Michigan Division Connection	GTW	Interlocking.
WR	Nickel Plate	Interlocking.
JD	C&O	Interlocking.
‡Otis	Monon	Interlocking.
PO	Porter Ivanhoe Branch	Interlocking.
Indiana Harbor	B&O and IHB	Interlocking.
Whiting	B&OCT	Interlocking.
Willow Creek	B&O / Wabash	Interlocking.
Tolleston	P. R. R.	Interlocking.
Ivanhoe	EJ&E	Interlocking.
‡Liverpool	P. R. R.	Interlocking.
‡South Gary	Nickel Plate	Interlocking.
Griffith	EJ&E / EL / GTW / C&O	Interlocking.
Hartsdale	P. R. R.	Interlocking.
Dyer	Monon	Interlocking.
‡Chicago Heights	C&EI	Interlocking.
Joliet: EJ&E Crossing	EJ&E	Interlocking.
MC Jct.	CRI&P	Interlocking.
Union Station	AT&SF / GM&O	Interlocking.
Olivers	Michigan Division Connection	Interlocking.
JK	NJI&I	Interlocking.
‡North Liberty	Wabash	Interlocking.
Walkerton	Nickel Plate and B&O	Interlocking.
Hamlet	P. R. R.	Interlocking.
‡Knox	Nickel Plate	Interlocking.
North Judson	EL, P. R. R. and C&O	Interlocking.
‡San Pierre	Monon	Interlocking.
‡Shelby	Monon	Interlocking.
Schneider	Indiana Division	Interlocking.
*Delmar	CMStP&P	Interlocking.
MJ	C&EI	Interlocking.
Kankakee	IC	Interlocking.
Reddick	Wabash	Interlocking.
Dwight	GM&O	Interlocking.
‡Streator Jct. .5 mile east	GM&O	Interlocking.
Streator	AT&SF	Interlocking.
‡Lostant	IC	Interlocking.

‡Automatic Interlocking.

*During hours office is closed trainmen finding signal in stop position will be governed by instructions posted in box at this location.

Drawbridges.

Lake Division

Location	Signals
Ashtabula Harbor, Ashtabula River	Interlocking.
Bridge No. 1, Cuyahoga River, Lake Front	Interlocking.
Bridge No. 2, Cuyahoga River	Interlocking.
Bridge No. 4, Lower Flats	Bridge Indicators.
Bridge No. 6, Central Flats	Bridge Indicators.

Toledo Division

*Sandusky, pier track, Bay Inlet	Semaphore.
DB, Sandusky Bay	Interlocking.
CO, Portage River	Interlocking.
Toledo, Maumee River	Interlocking.

*Bridge operated electrically. Normal position open and unlocked, as indicated by red light on outside of control station box on either side of channel. To operate bridge, trainman must first see that no boat is approaching, then open control box with switch key and be governed by instructions posted therein.

Western Division

Indiana Harbor, Ship Canal	Interlocking.
South Chicago, Calumet River	Interlocking.
East of Depue Jct., Illinois River	Interlocking.

103. PUBLIC CROSSINGS AT GRADE.

Where automatic highway crossing protection is in service and it is known to be functioning properly for the movement, protection by a member of the crew is not required.

Lake Division

Obstructing Public Crossings

Lake View Road, located 2,300 feet west of MP14, westward freight trains of more than 100 cars, using No. 3 track, must stop if automatic signal 123W does not display Figure 44, Rule 281B, and must not proceed until authorized by train dispatcher.

Painesville, Newell St.: Standing cars must not be left closer than 350 feet from line of street.

North Warren, Jackson St.: Cars must not be left standing closer than 75 feet from line of street.

Oil City: Trains will not block public crossings more than three minutes.

CP26: When home signal is at stop position, southward trains on main track or controlled siding will stop not closer than 500 feet north of road crossing, Route 322.

Alliance, Ohio: P. R. R. Interlocking: Northward trains, when stopping for crossing, must stop south of Columbia Street and wait until signal at Wall Street displays proceed indication.

Toledo Division

When the approach Signal D-561 North of Detroit Yard displays STOP indication, Southward freight trains on No. 1 track are to stop back of Oakwood Avenue crossing and crews are to report for further instructions.

Western Division

Porter:

Westward freight trains receiving indication, as per Rule 291, at signal 499.1 or westward trains with cars to set out at Porter with instruction to hold main track, will stop train east of "END OF CIRCUIT" sign, located 700 feet east of Calumet Road, and contact signalman at PO Interlocking.

La Porte.....Boston Street

Trains or engines moving eastward on No. 1 and No. 2 track must not proceed over highway until interlocking signals at WR indicate proceed and must then move promptly.

Switching movements must be protected by a member of crew over the following crossings:

Toledo Division

Elyria: River Road.
Danbury: Township Road 136.
Norwalk: Milan Ave.
Prospect Street.
Foster Avenue.
Wooster Street.
Whittlesey Avenue.
Monroeville: W. Monroe Street, Route 547.
Bellevue: Monroe Street.
Clyde: Main Street, Route 101.
Fremont, O: Croghan Street.
Napoleon Street
Garrison Street.
Birchard Avenue.
Hayes Avenue.
Auburn: Eleventh Street.

Trains or engines moving against the current of traffic must proceed at slow speed over the following highway crossings:

Lake Division

Location	Tracks
Berea, Lake Front Tracks, Eastland Rd.	1 and 2
Berea, Lake Front Tracks, Sheldon Rd.	1, 2 and 3
Berea, Lake Front Tracks, Five Points Rd.	1 and 2

Western Division

Lydick: Quincy Road, Country Club Road
New Carlisle: County Line Road, Arch Street

Trainmen must flag trains or engines over following crossings:

Lake Division

Erie: East 12th Street.
Ashtabula: State Road on track serving Diamond Alkali Co., running off Ceico lead, east and north of Ashtabula, Ohio.
Painesville: North Ridge Road crossing over Wye tracks to FP & E.
Headlands Road, on tracks serving Morton Salt Company, north and south crossings.
Oil City: Main St.
Reno: Oil City Pike on track serving Venango County Industrial Development Corp.
Eclipse: Oil City Pike.
Franklin: East Buffalo, Eleventh and Thirteenth Streets.
Bentley: Highway 62, on track serving Jennings Manufacturing Co.
Dunkirk: Talcott and Courtney Streets 7:01 A. M. until 7:01 P. M.
Brooks Ave. and Route 5
West Doughty Street.
Lampher Street, Lincoln Ave.
Fredonia: Main Street, Water Street and Wheelers.
Frewsburg: Main Street, when standing on or moving from the siding.
Falconer: Main Street.
Cleveland: Western Ave., West 110th St. and Berea Rd.

Toledo Division

Angola: US 20 and US 27.
Fremont, O.: Napoleon St.
Hayes Avenue.
Goshen: Bag track, Chicago St.
Lateral track, Pike St.
Hillsdale: Union St., in moving from siding to main track, while cars or engines are standing on Old Road main track between Union St. and former passenger station.
Union and Oak Street, when operating on side track.
Pleasant Lake: Highway 727, first crossing north of station
Waterloo: West Lincoln St., all movements.
Sturgis: Chicago, St. Joseph and West Street.
Litchfield: Main track and spur track Highway M49.
Fort Wayne: St. Marys Ave., Wells, Cass and Fourth Sts.
Jasper: Main Street M52.
Toledo: *Sylvania Ave
**Anthony Wayne Trail CS Jct.

*Train, yard and switching movements on all tracks must be protected by crew members, except on the two main tracks which are protected by flashing light signals.

**Highway traffic signals for Anthony Wayne Trail. Member of crew must operate control switch on approach side to put signals at stop and the control switch on leaving side, to clear them.

Western Division

Elkhart: Division Street—E & W—Old Big Four.
Jackson Street—Old Big Four.
Edwardsburg Ave.—Old Big Four
South Bend: Lincolnway West—Michigan Division Connection
Crisman: U. S. Highway Route 20 on sand spur
Hartsdale: Kennedy Avenue.
South Gary: Georgia St., on Board of Education track and on main track after coming off Board of Education track
Hamlet: Old U. S. Route 30 on P. R. R. wye track
Walkerton: U. S. Route 6 on B&O wye track
Streator: Broadway Street between 12:01 P.M. and 1:01 P.M., 5:01 P.M. and 8:01 A.M. Daily except Saturdays, Sundays and Holidays.

Trains and engines must stop before moving over the following crossings:

Lake Division

Dunkirk: Lampher Street and Lincoln Ave.
Titusville: Brown and Franklin Streets.
North Warren: Cars must not be switched over Warren-Jamestown road 4.088 feet south of North Warren.

Toledo Division

Tecumseh: Chicago St. Trains and engines will cross street in accordance with indication of traffic lights.
Goshen: East Lincoln Ave. Shipshewana Branch.
Hillsdale: On either side of Carleton Road just south of the enginehouse, irrespective of the movement being made over the east or the west wye
Grosvenor: Route 223 highway crossing on Morenci Branch just west of Grosvenor, Michigan.

Western Division

Elkhart: Beardsley Ave.—Old Big Four.
Jackson Street—E & W Branch.

Automatic Flashing Light Signals with or without Gates.

At all crossings where signs are provided on other than main tracks to indicate "End of Circuit", trains and engines operating on such tracks must proceed past sign located adjacent to track and approximately fifty feet from crossing prepared to stop and not cross the highway until gates are in horizontal position. Where flashing lights are in service without gates, the flashings lights must be operating for at least 20 seconds.

At all crossings where signs are provided on main tracks to indicate "End of Circuit" trains and engines stopping on main tracks must stop back of sign. When starting, if gates are raised or flashing light not operating, must proceed past sign prepared to stop and not cross highway until gates are in horizontal position. Where flashing light signals are in service without gates, flashing lights must be operating for at least 20 seconds.

Lake Division

Erie, Cascade Street

Trains and engines must not cross highway on Union Iron Works Company siding until gates are in horizontal position.

Cleveland, Lake Front Tracks:
Coit Road Private Crossing
East 70th Street
East 53rd Street
Marquette Street
East 49th Street
East 40th Street
East 38th Street
West 150th Street

Jensie, Mine Lead, County Highway 75.

In addition to automatic operation, switch key controllers are provided for manual control of flashing light signals and gates at the above crossings, except at Coit Road.

Instructions for operation of the control switches are posted at the crossings.

Trains and engines must proceed past sign adjacent to track on each side of the crossing prepared to stop and must not cross the highway until the gates are in horizontal position and the crossing is cleared of vehicles between the short arm gates.
Warren, Pa.....Combined U. S. Routes 62 and 6 MP 55.87.
Ashtabula, Ohio.....West Avenue—southwest wye

Toledo Division

Elyria: Olive Street.
CP 285: Wales Road.

Westward trains or engines stopping on No. 1 and No. 2 main tracks, or controlled siding, vicinity of Wales Road must stop with engine or head end of train in the release track circuit where end of circuit signs are placed on north side of No. 1 track and on south side of controlled siding approximately 600 feet east of Wales Road and approximately 4,800 feet west of MP 284, then when proceeding westward must not cross Wales Road until automatic flashing light signals are operating and gates are in horizontal position.

Huron: Eastward trains and engines on track No. 2 and on south controlled siding must stop west of end of circuit sign located 550 feet west of Center St. on south side of run-around track.

Toledo: *Nebraska Avenue, Toledo Terminal Branch.
*Phillips Avenue, Toledo Terminal Branch.

*Stop signs are placed 50 feet north and south of the crossing for running track west of southbound main track and also 50 feet north and south of the crossing for old MC running track. These signs are placed 50 feet from the street crossing to govern train movements over same using these tracks.

Toledo: Miami St. Trains and engines must stop back of the end of circuit signs located on the east side of tracks approximately 160 ft. south of Miami Street, and west of the tracks approximately 125 ft. north of Miami Street and proceed prepared to stop and not cross Miami Street until flashing light signals are operating and gates are in horizontal position.

Northward trains or engines stopping between a point approximately 100 feet Northward of the crossover between No. 2 Main Track and Campbell Street Siding North of Detroit Yard and the end of circuit sign, approximately 800 feet Southward of Nebraska Avenue Crossing, must proceed past the sign prepared to stop and not cross Nebraska Avenue crossing until flashing light signals are operating and gates are in horizontal position.

Stryker: Eastward trains and engines, end of circuit sign is located approximately 400 feet west of Defiance Street.

Waterloo: Wayne Street, Westward trains and engines, end of circuit sign is located approximately 4,000 feet east of Wayne Street.
Center St. end of circuit signs for westward trains No. 1 and No. 2 tracks are located approximately 400 feet east of Wayne Street, and 3,000 feet west of MP 366, westward freight trains stopping at Waterloo, will stop east of signs, and not cross Center Street until flashing light signals are operating and gates are in horizontal position.

End of circuit signs for eastward trains on No. 1 and No. 2 main tracks are located approximately 300 feet east of Waterloo station, and approximately 250 feet east of MP 367. Eastward freight trains stopping at Waterloo, will stop west of signs, and not cross Center Street until flashing light signals are operating and gates are in horizontal position.

Goshen:
Ninth Ave.
Lincoln Ave
Cottage Ave.

End of circuit signs are located on north side of tracks approximately 50 feet east and west of Lincoln Avenue crossing. Trains and engines on the siding north of and adjacent to No. 1 track, must stop back of signs at Lincoln Avenue and Ninth Avenue, and proceed prepared to stop and not cross Lincoln Avenue and Ninth Avenue Crossing until flashing light signals are operating and gates are in horizontal position.

Fifth St.
Cottage Ave.
Main St.
Wilkinson St.

Westward trains and engines stopping on No. 1 and No. 2 tracks or on the siding on south side and adjacent to No. 2 track, vicinity of Cottage Ave., must stop with engine or head end of train in the release track circuit where end of circuit signs are located 250 feet west of Cottage Ave., and approximately 1,800 feet west of MP 411, but not beyond end of circuit signs located 250 feet east of Fifth St., approximately 3,000 feet west of MP 411, and must proceed westward prepared to stop and not cross highway until automatic flashing light signals are operating and gates are in horizontal position.

Cottage Ave.
Lincoln Ave.
Ninth Ave.

Eastward trains and engines stopping on No. 1 and No. 2 tracks or on the siding on south side of and adjacent to main track No. 2 vicinity of Fifth St., must stop with engine or head end of train in the release track circuit where end of circuit signs are located 250 feet east of Fifth St. approximately 3,000 feet west of MP 411, but not beyond end of circuit signs located 250 feet west of Cottage Ave. approximately 1,800 feet west of MP 411, and must proceed eastward prepared to stop and not cross highway until automatic flashing light signals are operating and gates are in horizontal position.

Westward freight trains stopping at Goshen will stop east of end of circuit signs for westward trains and engines on No. 1 and No. 2 track located approximately 180 feet east of East Monroe Street to avoid activating automatic flashing light signals and/or gates at Ninth Ave., Lincoln Ave., Cottage Ave., Fifth, Main, and Wilkinson Streets.

Auburn: Seventh Street Siding.
Instructions for operation of the control switches are posted at the crossings.

Western Divison

South Bend.....Olive Street and Meade Street.
Instructions for operation of the control switches are posted at the crossings.

Trains or engines using the main track at the following locations must stop between the "End of Circuit" sign and the crossing and shall not proceed across the crossing until gates are in horizontal position. Where flashing light signals are in service without gates, flashing lights must be operating for at least twenty seconds. End of circuit signs are located adjacent to the crossing.

Lake Division

Fredonia, N. Y.....Main Street.

Toledo Division

Ida, Mich.....Main St.
Manchester, Mich.....McComb St.
Ft. Wayne, Ind.....Harrison St.

104a. NORMAL POSITION OF SWITCHES.

The normal position of switches is as follows:

Lake Division

Reno, Pa.: For EL.
Polk Jct.: Junction switch for JF & C Branch.

Cleveland:

Trains or engines using No. 4 siding must leave derails located about 800 feet east of West 117th St. and about 900 feet east of Detroit Avenue in derailing position.
WS Jct. No. 4 siding for No. 4 siding.
Darrowville siding, west end: for team track.

Toledo Division

Toledo: Fassett St.
North siding for Nickel Plate.

Lenawee Junction:
North wye switch Manchester Branch for east wye.

Waterloo:
Crossover from the east wye to Fort Wayne Branch main track at Waterloo for east wye.

Western Division

Streator Jct.:
Switch east end of siding, for siding.

The following switches in TCS Territory are not equipped with electric locks.

Lake Division

Carson, O.....South end of yard and both ends of siding and team track at north end.
Wick, O.....Main track at MP 26.4.
Gustavus, O.....Main track at MP 31.4.
Brookfield, O.....Main track at MP 46.8.
Main track at MP 47.1.
Cleveland, O.....No. 4 Lake Front, Firestone switch located 1,290 feet west of MP 192.0.
No. 4 Lake Front, Ohio Warehouse Incorporated switch located at MP 192.0.

Trains are not permitted to clear main track at these switches.

Toledo Division

Shawville, O.....No. 1 track to siding MP 202.3
Elyria, O.....No. 2 track to Murbach Coal Co., 1800 feet west of MP 207.
No. 2 track to Parsch Lumber Co., 1800 feet east of MP 207.
Ceylon, O.....No. 1 track to north siding MP 228.6

Trains are not permitted to clear the main track at these switches.

104e. SPRING SWITCHES

When signal indicates stop, the switch must be examined, and if found in proper position, train may proceed; if not in proper position, switch must be operated by hand before movement is made over it. Rule 104b will govern if switch is found defective.

Lake Division

Location	Normal Position	Signal
Collinwood		
Junction of Leads and North Main track Eight hundred (800) feet east of track indicator signal at QD INT.	For No. 1 Lead	Switch Repeating.
Hugo		
Jct. of Eastward and Westward main tracks.	For Eastward main track.	Automatic Block Signal B26.2.
Brandywine		
West end of siding.	For main track.	*Switch repeating.
Warner		
Jct. of Westward and Eastward main tracks.	For Westward main track.	**Switch repeating.

*Indication of fixed signal must be observed when westward movement through switch has been completed. If signal does not display "Proceed", enginemen of eastward trains must be advised to approach switch prepared to stop and train dispatcher notified from first open office.

**Indication of fixed signal must be observed when eastward movement through switch has been completed. If signal does not display "Proceed", enginemen of westward trains must be advised to approach switch prepared to stop and train dispatcher notified from first open office.

Toledo Division

Location	Normal Position	Signal
Elyria		
Norwalk Branch to Jct. Yard.	Jct. Yard	Switch repeating.
Stanley		
Jct. of leads North of Walbridge road.	For yard "S".	Switch repeating.
Stanley Diesel Facility —Crandall Road		
Jct. Nos. 1 & 4— Diesel Shop Lead	No. 1 yard track	Switch repeating.
Jct. Nos. 3 & 1— Diesel Shop Lead	No. 3 yard track	Switch repeating.
Jct. Nos. 4 & 5— Diesel Shop Lead	No. 4 yard track	Switch repeating.
Toledo		
Fassett St., Jct. North Siding & No. 1 main track	No. 1 main track	Controlled Signal.

Toledo Passenger Station

East End

Location	Normal Position	Signal
No. 2 lead Jct. No. 2 and No. 3 track	No. 2 yard track	Switch repeating.
No. 1 lead Jct. No. 4 and No. 5 track	No. 4 yard track	Switch repeating.

West End

Location	Normal Position	Signal
No. 3 lead Jct. No. 1 and No. 2 tracks	No 1 yard track	Switch repeating.
No. 2 lead Jct. No. 3 and No. 4 tracks	No. 3 yard track	Switch repeating.
No. 1 lead Jct. No. 5 and Lead track	No. 5 yard track	Switch repeating.

When ready to depart, trains must receive permission from station master before fouling spring switches at east or west end of passenger station.

Engines departing westward from diesel facility must obtain permission from signalman at Wabash Interlocking before fouling spring switches at west end of passenger station.

Engines moving eastward through passenger station enroute to the diesel facility must receive permission from signalman at Wabash Interlocking before fouling spring switches at east end of passenger yard.

Engines, before moving eastward out of diesel facility, must notify signalman at Wabash Interlocking when leaving.

Trains or engines entering Toledo passenger station will be governed by the indication on the electric lighted switch targets at the spring switches.

On all other movements at the east or west end of the passenger station the spring switches must be hand operated and restored to normal position when movement is completed.

Air Line Jct., Hawley St.		
Yd. 1 to 3 main	3 main	Switch repeating.

Western Division

Location	Normal Position	Signal
Englewood		
Jumbo Lead at 61st St. Engine House		
Departure Track	Track 21	Switch repeating.
Running Tracks Nos. 11 and 12	Track 12	Switch repeating.
Kankakee		
Jct. east end of West yard and main track.	For main track.	***Switch repeating.
Jct. west end of west yard and main track.	For yard	***Switch repeating.

***Indications of the fixed signal must be observed when trailing movements through switch have been completed. If signal does not display "Proceed," enginemen of opposing trains must be advised to approach switch prepared to stop and dispatcher notified from first communicating station.

105. SIDINGS.

Lake Division

Trains taking siding will take first switch, except:

Falconer Jct..... Scale track will be used as siding.
North Warren....Southward, long siding, first switch to west of main track.
Warren.....Northward, house track, second switch to east of main track
Andover.....Eastward, first switch on south side of track.
Jamestown.....Eastward, first switch east of P. R. R. crossing.
Stoneboro.....Westward, at crossover at Sandy Lake. Eastward, first switch east of Branch north siding.
Sutton..... Westward at crossover opposite station.

Capacity, based on 44-ft. cars.

BR-MP 168.1	South	348
Dunkirk	North	129
Cassadaga		21
Falconer Jct		12
North Warren		25
Warren		29
Carson		95
Dorset		43
Coalburg		175
CP52-CP 56		420
Andover		120
Jamestown		43
Branch, North Side		66
Branch, South Side		40
Stoneboro		255
Sutton		100
RN		77
Shippenville		67
Elmo		84
Van		47
Belmar		68
Polk Jct		85
Alliance Yard, No. 4 yard track		42
Mount Union		36
Watheys		74
Shepherd		74
Hopedale		54
Piney Fork, No. 4 yard track		44
Darrowville		34
Brandywine		143
Northfield		25

Toledo Division

Trains taking siding will take first switch except:

Norwalk	Westward, second switch on north side east of station. Eastward. crossover west of station.
Bellevue	Westward, crossover. Eastward, second switch.
Clyde	Eastward, crossover west of station.
Fremont,Ohio.	Eastward, crossover.
Sylvania	Eastward, crossover east of station.
Blissfield	Eastward, third switch east of station.
Lenawee Jct.	Manchester Branch trains, southward east wye.
Hillsdale	Eastward, second switch. Westward, crossover east of station.
Coldwater	Westward, crossover east of station.
Bronson	Westward, crossover east of station.
Sturgis	Westward, crossover east of station.
White Pigeon	Eastward, second switch except Northern District trains. Westward, crossover east of station.

Capacity based on 44-ft. cars.

	Westward	Eastward	Eastward & Westward
CP203-CP207			525
Amherst	225	...	...
Fairlane	...	...	235
CP240-CP242	210	210	...
Norwalk			51
Bellevue			58
Clyde			69
Fremont, Ohio			65
Elmore			45
Genoa			60
Millbury Jct			60
Delta Yard	132		...
Sylvania			65
Ottawa Lake			59
Blissfield			70
Lenawee Jct			76
Adrian			53

	Westward	Eastward
Hillsdale		80
Quincy		42
Coldwater		40
Bronson		53
Sturgis		25
White Pigeon		48

	Northward & Southward
Auburn	38
Waterloo	50
Pleasant Lake	24
Angola	55
Tecumseh	39

Note: Between end of automatic block signs CP203 and CP207, CP240 and CP242, yard engines must obtain permission from train dispatcher before occupying track.

Western Division

Trains taking siding will take first switch, except:
Reddick.....Westward, second switch.

Capacity based on 44 foot cars.

	Westward	Eastward
South Bend	...	109
Terre Coupee	142	...
LaPorte	45	...
Chesterton	119	119
PO	125	114
Portage	97	
Millers	150	...
Pine	175	

	Westward	Eastward	Westward and Eastward
Ginger Hill	...	...	85
Hamlet	...	...	107
North Judson	...	...	179
Wheatfield	...	...	80
Schneider	...	...	117
Reddick	...	...	85
Dwight	...	...	65
Streator Jct	...	...	185
South Gary			8
Hartsdale			100
Chicago Heights			16
(Porter Ivanhoe Branch)			...
Porter	109	108	...
Willow Creek	104	120	...
Elkhart Oakland Ave—WG			460

CONTROLLED SIDINGS

Capacity based on 44 foot cars.

Lake Division

		Capacity			Capacity
CP 21	CP 23 South	197	CP 113	CP 117 North	440
CP 31	CP 32 North	200	CP 113	CP 117 South	440
CP 31	CP 32 South	200	CP 130	CP 132 South	207
CP 37	CP 39 North	356	CP 134	CP 137 North	335
CP 37	CP 39 South	336	CP 141	CP 143 North	252
CP 39	CP 40 North	36	CP 145	CP 148 North	335
CP 39	CP 40 South	48	CP 145	CP 148 South	335
CP 56	CP 58 North	210	CP 150	CP 154 North	356
CP 56	CP 58 South	210	CP 152	CP 154 South	155
CP 70	CP 73 North	274	CP 154	CP 155 North	193
CP 79	CP 85 South	715	CP 154	CP 155 South	193
CP 89	CP 92 North	350	CP 162	CP 167 North	540
CP 100	CP 103 North	286	CP 167	BR North	475
CP 100	CP 103 South	286			

Youngstown Branch.

CP 13	CP 14 East	250
CP 24	CP 26 East	315
CP 36	CP 38 West	250

Toledo Division East

		Capacity
BE	CP 197 North	390
CP 232	CP 234 South	225
CP 242	CP 244 North	230
CP 242	CP 244 South	230
CP 253	CP 256 North	259
CP 281	CP 285 South	500

Toledo Division West

		Capacity
AV	CP 295 North	368
CP 304	CP 307 North	200
CP 327	CP 329 North	260
CP 340	CP 342 South	200
CP 415-B	South	680

Western Division

		Capacity
East Pinola—JD	South	290

109. BULLETIN BOARDS AND BOOKS.

Lake Division

Dunkirk	Engine house. Yard office.
%†Wesleyville	Engine dispatcher's office
Erie	East Yard, yard office.

%†Ashtabula.....West Yard, trainmen's and yardmen's crew room.
Ashtabula Harbor.....Yardmen's crew room.
Painesville.....**Station.**
Warren.....**Station.**
Youngstown....**Yard office, McGuffey St.**
East **Youngstown**..**P&LE YMCA Building** Engine crew room.
Hubbard.....Station.
Stoneboro.....Station.
Sutton.....Station.

Minerva and Brady: P. R. R. General Orders and Notices, governing the territory between Minerva and Brady, will be posted at Rockport and Minerva.

DB and Harvard Ave.: P. R. R. General Orders and Notices, governing the territory between DB and Harvard, will be posted at Rockport and Collinwood engine house and Collinwood crew dispatcher's office.

West 73rd Street and Coal Dock Yard: Nickel Plate W&LE District General Orders and Notices, governing the territory between West 73rd Street and Coal Dock Yard will be posted at Rockport and Collinwood.

Collinwood....
- Yard office east end westbound yard.
- Switchtender cabin Dille Road.
- %Yard office west end eastbound yard.
- *Crew dispatcher's office. NYC dormitory.
- %*Engine dispatcher's office.
- Yard office Fisher Body Company.

East 55th St.....Yard office.

Cleveland Union Terminal.....
- #%*Crew dispatcher's office
- #*Engine crew room.
- CUT telegraph office.
- Yard office, east end
- Yard office, west end

West 117th St.....Yard office.
West Park ..... Yard office
Rockport .....
- **Yard offices, east and west end.**
- **Yard office Hummel Road.**

Orange Ave.....Switchmen's crew room.
Quincy Ave.....Yard office.
Marcy ..... Yard office.
Mail Hall.....Yard office.
DK .....Yard office.
Clark Ave.....Yard office.
Linndale.....Yard Office.
Minerva
- Enginemen's crew room.
- Yard office.

%Buffalo Division Bulletins posted at these locations.
*Toledo Division Bulletins posted at these locations.
#Ohio Division Bulletins posted at these locations.
Lake Division Bulletins posted in trainmen's room, Buffalo Central Terminal.
†P&LE RR Bulletins posted at these locations.

Toledo Division

Elyria .....
- Yard office.
- **Diesel Foreman's office.**

Fairlane.....Yard office
Sandusky.....Yard office
Toledo**.....*Baggage room.**
*Air Line Jct.....
- East end Air Line Yard, yard office.
- Detroit Yard, yard office.
- ** Register clerks office.
- West end New Yard, yard office.

*Stanley Yard.....
- Yard O, yard office.
- Yard K, yard office.
- **Telegraph office.**
- **Diesel shop.**

***Wagon Works Jct**.....Yard office.
*Adrian.....Crew room.

***Hillsdale**.....
- **Engine house.**
- Station vestibule.

***Fort Wayne**.....**Freight office.**
***Northern District Bulletins will be posted at these locations.**
Toledo Division Bulletins posted in train crew room, Buffalo Central Terminal.
****Lake Division Bulletins will be posted at these locations.**

Western Division

Elkhart.....
- ‡Passenger station.
- ‡Engine house, north side of hump.
- ‡Engine crew room, passenger station.
- Hump yard office.
- ‡Dormitory.
- ‡West end crew room.

South Bend....General yardmaster's office.
La Porte.....Freight office.
Bethlehem.....Temporary yard office.
Portage.....Trailer at Burns Ditch.
***Joliet**.....Agents office.
#*Indiana Harbor..... Yardmaster's office.
**#Englewood....
- Park Manor crew room.
- Engine house.
- Trainmaster's office.

#*Blue Island...
- Dormitory.
- Eastbound yardmaster's office.

Kankakee....
- Register room west yard.
- Yard office, Hobbie Ave.

Zearing.....Telegraph office.
**#Gibson.....
- East end yard office.
- Engine house.

****Southern District Bulletins will be posted at this location.**
***Northern District Bulletins will be posted at this location**
#IHB Bulletins will be posted at this location.
‡Toledo Division Bulletins posted at these locations.
Toledo Division Bulletins posted in train crew room, Chicago La Salle Street Station.

DESIGNATION AND USE OF MAIN TRACKS

Lake Division

Single Track:

Between **Dunkirk and Titusville.**
Jefferson Jct. and Jefferson.
CP4 and CP56.
CP14 and Oil City.
Polk Jct. and Rose.
CP52 and Ferrona.
DB and Clark Ave.
Newton Falls and Piney Fork.
Hugo and Warner.
Short Line Jct. and Belt Jct. No. 3 westward.

D-151.

Two Tracks:

Between CP 15 and CP 124, CP 130 and BR.
Tracks are numbered from the south and will be used as follows:
No. 2, Eastward and Westward.
No. 1, Westward and Eastward.

Between JM and CP 4.
Valley Street and Youngstown.
Tracks are numbered from the west and will be used as follows:
No. 1, Southward.
No. 2, Northward

Between CP56 and Valley Street
Tracks are numbered from the west and will be used as follows:
No. 1, Southward and Northward.
No. 2, Northward and Southward.

Between BR and QD
Tracks are numbered from the south and will be used as follows:
No. 2 Eastward and Westward.
No. 1 Westward.

Between QD and CT
CT and BE
700 feet west of East 9th Street and Belt Jct.
Tracks are numbered from the south and will be used as follows:
No. 2, Eastward.
No. 1, Westward.

Between QD and Short Line Jct., via CSL.
Tracks are numbered from the south and will be used as follows:
No. 4, Eastward.
No. 3, Westward.

Between Brady and Hugo.
Warner and Marcy.
Tracks are numbered from the south and will be used as follows:
No. 2, Eastward
No. 1, Westward.

Three Tracks:
Between BV and CP 15.
Tracks are numbered from the south and will be used as follows:
No. 2, Eastward and Westward.
No. 1, Westward and Eastward.
No. 3, Westward and Eastward.

Between QD and 700 feet west of East 9th Street.
Tracks are numbered from the south and will be used as follows:
No. 2, Eastward.
No. 1, Westward.
No. 4, Eastward.

Four Tracks:
Between CP 124 and CP 130.
Tracks are numbered from the south and will be used as follows:
No. 4, Eastward and Westward.
No. 2, Eastward and Westward.
No. 1, Westward and Eastward.
No. 3, Westward and Eastward.

Between Belt Jct. and BE.
Tracks are numbered from the south and will be used as follows:
No. 4, Eastward and Westward
No. 2, Eastward.
No. 1, Westward.
No. 3, Westward.

Toledo Division
Single Track:
Between: Elyria Jct. and Millbury Jct., via Norwalk.
Vulcan and Hudson.
Osseo and White Pigeon Jct.
Grosvenor and Morenci.
Haires and Fort Wayne Jct.
Hillsdale and Fort Wayne.
Jonesville and Litchfield.
Manchester and Lenawee Jct.
Goshen and Shipshewana.
Lenawee Jct. and Ida.
Hillsdale and North Adams
CP 412 and Yost.

D-151.
Two Tracks:
Between: BE and B.
Tracks are numbered from the south and will be used as follows:
No. 2, Eastward and Westward.
No. 1, Westward and Eastward.
Between: CP 286 and Rockwell Jct.
Tracks are numbered from the west and will be used as follows:
No. 1, Southward.
No. 2, Northward
Between: Swan Creek and Alexis.
Tracks are numbered from the west and will be used as follows:
No. 1, Southward.
No. 2, Northward.

Western Division
Single Track:
Between: HF and NYC Jct.
LX and Churchill.
East Gary and Joliet.
Elkhart and Mishawaka E&W Branch.

D-151.
Two Tracks:
Between: B and WG.
JD and East Pinola
Tracks are numbered from the south and will be used as follows:
No. 2 Eastward and Westward.
No. 1 Westward and Eastward.

Between: WG and JD,
East Pinola and CR
JN and 61st St.,
PO and Ivanhoe.
Tracks are numbered from the south and will be used as follows:
No. 2, Eastward
No. 1, Westward.

Four Tracks:
Between: CR and JN.
Tracks are numbered from the south and will be used as follows:
No. 2, Eastward.
No. 1, Westward.
No. 4, Eastward.
No. 3, Westward.

221. TRAIN ORDER SIGNALS.

Rules 221-A, 221-B and 221-C will apply at offices as listed under Stations, Office Calls and Office Hours.

MOVEMENT OF TRAINS BY BLOCK SIGNALS.

Track	Between	Assigned Direction	Operation
Lake Division			
3	BV and CP 15	None	Rules 550 to 562, inclusive
1	BV and BR	None	Rules 550 to 562, inclusive
2	BR and BV	None	Rules 550 to 562, inclusive
3	CP 124 and CP 130	None	Rules 550 to 562, inclusive
4	CP 130 and CP 124	None	Rules 550 to 562, inclusive
1	JM and CP 4	Southward	Rules 251 to 254, inclusive
2	CP 4 and JM	Northward	Rules 251 to 254, inclusive
Single	CP 4 and CP 56	None	Rules 550 to 562, inclusive
1	CP 56 and Valley Street	None	Rules 550 to 562, inclusive
2	Valley Street and CP 56	None	Rules 550 to 562, inclusive
1	Valley Street and Youngstown	Southward	Rules 251 to 254, inclusive
2	Youngstown and Valley Street	Northward	Rules 251 to 254, inclusive
Single	CP 52 and Hubbard	None	Rules 550 to 562, inclusive
1 via CUT	BR and BE	Westward	Rules 251 to 254, inclusive
2 via CUT	BE and QD	Eastward	Rules 251 to 254, inclusive
2 via CUT	QD and BR	None	Rules 550 to 562, inclusive
1 Lake Front	QD and BE	Westward	Rules 251 to 254, inclusive
3 Lake Front	Belt Jct. and BE	Westward	Rules 251 to 254, inclusive
2 Lake Front	BE and QD	Eastward	Rules 251 to 254, inclusive
4 Lake Front	Double Track and QD	Eastward	Rules 251 to 254, inclusive
3 via CSL	QD and Belt Jct.	Westward	Rules 251 to 254, inclusive
4 via CSL	Short Line Jct. and QD	Eastward	Rules 251 to 254, inclusive
Single	DB and Clark Avenue	None	Rules 550 to 562 inclusive
4	BE and Belt Jct.	None	Rules 550 to 562, inclusive
Toledo Division			
1	BE and B	None	Rules 550 to 562, inclusive
2	B and BE	None	Rules 550 to 562, inclusive
1	CP286 and Rockwell Jct	Southward	Rules 251 to 254, inclusive
2	Rockwell Jct. and CP286	Northward	Rules 251 to 254, inclusive
2	Swan Creek and Alexis	Northward	Rules 251 to 254, inclusive
1	Alexis and Swan Creek	Southward	Rules 251 to 254, inclusive
Single	CP 412 and Yost	None	Rules 550 to 562, inclusive
Western Division			
1	B and WG	None	Rules 550 to 562, inclusive
1	WG and JD	Westward	Rules 251 to 254, inclusive
1	JD and E. Pinola	None	Rules 550 to 562, inclusive
1	East Pinola and 61st St.	Westward	Rules 251 to 254, inclusive
2	61st St. and East Pinola	Eastward	Rules 251 to 254, inclusive
2	East Pinola and JD	None	Rules 550 to 562, inclusive
2	JD and WG	Eastward	Rules 251 to 254, inclusive
2	WG and B	None	Rules 550 to 562, inclusive
3	CR and JN	Westward	Rules 251 to 254, inclusive
4	JN and CR	Eastward	Rules 251 to 254, inclusive
1	Porter and Ivanhoe	Westward	Rules 251 to 254, inclusive
2	Ivanhoe and Porter	Eastward	Rules 251 to 254, inclusive

MOVEMENT OF TRAINS BY TIME TABLE AND TRAIN ORDER ONLY

Note: Movement of passenger trains will be made under Manual Block Signal System rules and passenger trains will be required to receive Clearance Form A at open Train Order Offices which will be considered as Manual Block Stations for movement of such trains.

TRACK	BETWEEN	ASSIGNED DIRECTION	OPERATION Time Table	OPERATION Train Order
LAKE DIVISION:				
Single	Dunkirk and Titusville	None	•	•
Single	Jefferson Jct. and Jefferson	None	•	
Single	Oil City and CP 14	None	•	•
Single	Rose and Polk Jct	None	•	•
Single	Hubbard and Ferrona	None	•	
Single	Newton Falls and Piney Fork	None	•	•
Single	Hugo and Warner	None	•	•
1	Brady and Hugo	Westward	•	•
2	Hugo and Brady	Eastward	•	•
1	Warner and Marcy	Westward	•	•
2	Marcy and Warner	Eastward	•	
TOLEDO DIVISION:				
Single	Elyria Jct. and Millbury Jct.	None	•	•
Single	Vulcan and Hudson	None	•	•
Single	Osseo and White Pigeon Jct.	None	•	•
Single	Grosvenor and Morenci	None	•	•
Single	Haires and Fort Wayne Jct.	None	•	•
Single	Hillsdale and Fort Wayne	None	•	•
Single	Manchester and Lenawee Jct.	None	•	•
Single	Goshen and Shipshewana	None	•	•
Single	Lenawee Jct. and Ida	None	•	
Single	Hillsdale and Litchfield	None	•	
Single	Hillsdale and North Adams	None	•	

TRACK	BETWEEN	ASSIGNED DIRECTION	OPERATION Time Table	Train Order
WESTERN DIVISION:				
Single	HF and JK	None	•	
Single	JK and NYC Jct.	None	•	•
Single	East Gary and Joliet	None	•	•
Single	Ladd and Churchill	None	•	
Single	E & W Branch	None	•	

291. Grade Signals

At signals with letter G attached to mast, when displaying 291 indication, trains or engines may pass without stopping Proceed at restricted speed.

293. TAKE SIDING SIGNAL.

Lake Division

Take siding signal located on mast of southward home signal at CP52. When displayed will govern southward movement to siding located 100 feet south of northward home signal at CP52, which is a hand thrown switch equipped with electric lock.

Western Division

Willow Creek:

Take siding signal located on mast of automatic signal 2441. When displayed westward freight trains will take siding at east switch of westward siding.

JD and PO:

Take siding signal will be given by the display of a green board by day and a green board and two green lights by night.

This signal applies only to the movement of freight trains with the current of traffic and will be displayed on the ground, or from the station window.

Westward freight trains receiving take siding signal at JD will take siding at Chesterton.

Westward freight trains receiving take siding signal at PO will take siding at Pine.

294. MAIN TRACK SWITCH TARGETS.

Lights on main track switches are not in use

Lake Division

Between: BV and BR, QD and Belt Jct via CSL, except Rockport Yard.
DB and BE via Clark Ave
DB and BE via Lake Front.

Toledo Division

Between BE and Butler via Main Line.

297. RAILROAD GRADE CROSSING SIGNALS

Trains must stop before proceeding unless otherwise indicated.

Location	Railroad	Signal	Position	Indication
Lake Division				
Titusville	PRR	Flag Protection		
Erie				
Hammermill west Lead track	PRR	Target	Horizontal	Proceed
Hammermill east Lead track	PRR	Target	Horizontal	Proceed
West of freight station	PRR	Target	Horizontal	Proceed
Youngstown	EL	Target	Diagonal	Proceed
Republic Steel Corporation	B&O	Target	Vertical	Proceed
Hubbard	EL	Target	Vertical	Proceed
Cleveland				
*East 55th St. Team track	PRR	Switch Target	Green	Proceed
**Newton Falls	B&O	Target	Vertical	Proceed
†Alliance	PRR. C&P Div	Target	Vertical	Proceed
‡Minerva	Nickel Plate	Target	Vertical	Proceed
	PRR	Target	Vertical	Proceed

* Trainmen will operate target.

**Trainmen will operate target. Normal position for NYC Proceed on main track, also over Standard Steel Spring Company lead without stopping at restricted speed.

† Trainmen will operate target and restore and lock it in position for C&P Division, PRR.

‡ Trainmen will operate targets, and leave in Proceed position for NYC. When targets indicate Proceed trains and engines may proceed over crossings at restricted speed.

Toledo Division

Elyria Jct	B&O Wye	Stop Sign		
*Sandusky Pier Track	B&O	Target	Vertical	Proceed
CS Jct	Nickel Plate	Target	Horizontal	Proceed
**Between K and Alexis	C&O	Target and Gate	Horizontal Gate over C&O	Proceed
*Clyde	Ohio Div	Target	Vertical	Proceed
*Fremont, Ohio	Nickel Plate	Target	Vertical	Proceed
Adrian	DT&I	Stop Sign		
Bimo	DT&I	Stop Sign		
†Fort Wayne	PRR	Gate	Over PRR	Proceed
Lenawee Jct	Ida Branch	Stop Sign		
Tecumseh	Industrial Siding	Flag Protection		
‡Petersburg	DT&I	Electrically operated gates	Over DT&I	Proceed

* Trainmen will operate target, leaving it in position last used

**Trainmen will operate gate.

† Trainmen will operate gate. Normal position against NYC.

‡ Trainmen will operate gate. Normal position against NYC. Instructions for operation posted at crossing in pole box.

Western Division

South Bend				
*Bendix Lead	CSS& SB	Gate	Over CSS& SBRR	Proceed
*O'Brien Track	CSS& SB	Flag Protection		
*Michigan Division Connection	CSS& SB	Flag Protection		
Michigan Division Connection	NJI&I	Flag Protection		
South Chicago Connection	Belt Ry	Target	Horizontal	Proceed
Streator Jct	Wabash Iowa Track	Flag Protection		
	CB&Q	Flag Protection		
Streator	GM&O	Gates	Vertical	Proceed
	Wabash North Wye Track	Flag Protection		
Ladd Jct	CB&Q	Flag Protection		

* All trains and engines must stop before crossing and, in addition, a member of the crew will first go to the crossing to determine train is not approaching on the CSS&SB RR, before proceeding.

STOP SIGNS.

At signs reading "Stop" trains and engines, after making a stop, will proceed in accordance with instructions contained in the time-table under other rules, bulletin orders or instructions posted at the location.

505. AUTOMATIC BLOCK SIGNAL SYSTEM.

Unless otherwise provided, Manual Block Signal System Rules will govern movements against current of traffic.

513. ENTERING OR CROSSING MAIN TRACK.

Lake Division Between QD and Belt Jct. via CSL.

Buckeye Road, trains or engines must not foul main tracks or cross from one main track to another without permission from signalman at QD when authorized by train dispatcher

605. INTERLOCKING LIMITS

Lake Division

Interlocking limits CT extend from East 34th Street to West 25th Street.

663a. REMOTE CONTROL SWITCHES AND SIGNALS.

At locations where remote controlled switches may be operated by hand in an emergency, additional instructions are posted in the phone booth at the locations.

Location	Control Station	Tracks
Lake Division		
Hubbard	Cleveland	Signal only
BR	QD	All tracks
Clark Ave	SL	All tracks
West End Rockport Yard	BE	No. 4 track to Rockport Yard leads.

Location	Control Station	Tracks
Toledo Division		
Fassett Street	Wabash	North siding to Nickel Plate Signals only
Maumee River Drawbridge	Wabash	All signals and switch to B&O.
K	Alexis	Signals only
Vulcan	Swan Creek	All tracks
Western Division		
Oakland	B	All tracks
WR	JD	Signals only
East Pinola	JD	All tracks
Porter, west end of eastward siding Dual Control	PO	No. 2 to siding.
Porter Ivanhoe Branch, 1.2 miles west of Dual Control	PO	Eastward main track to siding

663b. AUTOMATIC INTERLOCKING.

Lake Division

Reno

Location 2.3 miles east of Franklin, Pa. switches are normally lined for EL movements. NYC control signal will indicate Rule 283, Figure 91 and Rule 292, Figure 201. Instructions governing operation of automatic interlocking are posted in phone booth at above location.

***Jamestown**
***Amasa**

Western Division

***North Liberty**
***Knox**
***San Pierre**
***Shelby**
***Streator Jct.**
***Lostant**
***Liverpool**
***South Gary**
***Chicago Heights**
***Otis**

*After train or engine has passed approach signal permitting it to proceed and is delayed, it must proceed at restricted speed, expecting to find the home signal in stop position.

TRAIN INSPECTION SIGNALS.

Lake Division

Located at Signal 2304.3 approximately Four Hundred (400) feet east of Fairhill Road to detect over dimension shipments.

Note: This applies to westward trains moving with or against the current of traffic.

Toledo Division

Located on signal bridge 4,500 feet east of Elyria Station; 3 feet to south side of mast of automatic signal 2052E, governing eastward movements on No. 2 track, 3 feet to south side of mast of automatic signal 2051E, governing eastward movements on No. 1 track.

Located on post on north side of No. 1 track in vicinity of MP 221 at Vermilion, governing westward movements on No. 1 track.

Located one mile west of station at Stryker, on north side of mast of automatic signal 3352E, governing eastward movements on No. 2 track; on south side of mast of automatic signal 3351E, governing eastward movements on No. 1 track.

Western Division

Located on north side of mast of automatic signal 474-1 located 1 mile west of station at Rolling Prairie, governing westward movements on No. 1 track.

Located on south side of mast of automatic signal 465-2 located 1000 feet east of M.P. 449, governing eastward movements on No. 2 track.

Located on south side of automatic signal 489-2 located one and one-quarter miles east of Otis, governing eastward movements on No. 1 and No. 2 track.

705. LEAVING CARS ON SIDE TRACKS.

Cars must not be left bridging across insulated joints in track rails where tank cars are placed.

Cars with hot journals must not be left on any track in close proximity to where gasoline is loaded or unloaded.

752. RADIO STATIONS AT FIXED LOCATIONS.

Lake Division

Erie-ERI Office
OD-INT
QD-INT
Cleveland Train Dispatcher's Office
Rockport Tower Yardmaster's Office
Berea-INT

Toledo Division

Fairlane Trainmaster's Office
Toledo Train Dispatcher's Office
Swan Creek-INT
Air Line Jct. Tower AGYM Office
Nasby-INT

Western Division

Elkhart, Robert R. Young Yard, Hump Office
HF-INT
JD-INT
PO-INT
NE-INT
JN-INT
Englewood Tower, AGYM Office
Chicago, Train Dispatcher's Office

824. MAKE-UP OF PASSENGER, MAIL, EXPRESS AND DEADHEAD EQUIPMENT TRAINS.

Passenger equipment must be of steel construction with the exception that baggage, horse, refrigerator and milk cars of steel underframe construction may be hauled, also such steel underframe passenger cars as are used under special arrangement.

Cars equipped with steam train line must have steam connectors securely connected to adjacent cars or secured by use of wire to assure proper clearance above rail except steam connector on rear of rear car may be secured by use of chain support without use of wire.

HEATING, LIGHTING, VENTILATION AND AIR CONDITIONING OF CARS

Rear end steam line valve must be opened gradually to full open position when blowing out steam line to avoid metal gaskets being blown out

Trainmen must, when outside temperature is less than twenty (20) degrees above zero, regularly at fifteen (15) minute intervals, open rear steam heat valve wide and fully blow steam line free of condensate.

Before steam pressure is connected to standing cars steam line valve must be closed at opposite end of line.

The application of Steam Heat Equipment Rule No. 1724 is as follows:

Lake Division

Approaching	Direction	Open rear end steam pipe valve	Engineman shut off steam at
Buffalo Central Term	Eastward	FO	BC
Cleveland Union Term.	Westward*	E. 34th St	Eagle Avenue
Cleveland Union Term.	Eastward	W 25th St.	First signal bridge east of Cuyahoga River.

*Except EL:—Leaving Broadway.

Toledo Division

Toledo	Westward	Fassett St.	Maumee River Bridge
	Eastward	Fearing St	Swan Creek
	Eastward	Nebraska Ave.	Swan Creek

Western Division

Elkhart	Westward	Hively Ave	Home signal B
Elkhart	Eastward	21st St	**Between MP 440 and west end of passenger station platform.
Englewood Yard	Westward	So Chicago Sta	Westward home signals JN.
Chicago	Westward	31st St.	22nd St.

** Should a train be stopped between MP 440 or for crossover switches, steam valve must not be closed until after train is again started.

HAND BRAKE TEST.

A running test of hand brakes must be made on a Rail Diesel Car or Rail Motor Car upon leaving initial terminal when operating as a single unit. As soon as speed permits, engineman must place throttle lever of RDC car in No. 1 position (rail motor car in OFF position) and signal for brakes. The conductor or member of train crew must then apply hand brakes to determine if they are operating properly. In case hand brakes do not operate properly, car must proceed at restricted speed to the nearest point at which repairs can be made.

RAIL DIESEL CARS, CLASS RDC

Trains or engines must not be permitted to follow single unit RDC cars into block between open stations in ABS territory or between controlled signals in TCS territory

When making stops in automatic block and interlocking signal territory, two stops must be made. After the first stop is made, the car will be moved forward at least six feet when making the second stop, to avoid stopping on sand.

At interlockings, remote controlled locations and in Traffic Control System Territory, switches in route taken by RDC cars will not be operated until it has been ascertained that movement through the route has been completed.

INSTRUCTIONS FOR MOVEMENT OF BUDD BUILT RDC CARS IN TRAINS, PASSENGER OR FREIGHT

In passenger trains, RDC cars should be hauled as the rearmost unit, or units, unless:

1. Car involved has been equipped with train air signal pipe (**Do not** connect RDC car main reservoir equalizing hose to signal hose of cars in passenger train).
2. Steam heat is **not required** for heating cars behind such RDC car (Steam train line through RDC cars is 1½" only).

In freight trains, RDC cars must be hauled in accordance with instructions for handling passenger cars in freight trains. Control valves must be conditioned for "Direct Release" of brakes.

When RDC cars moving in a passenger train are occupied, one diesel engine must be kept running to provide battery charging, light and air conditioning.

In freezing weather RDC cars must have both diesel engines running, or must be connected to steam supply, and main battery switch must be closed. If diesel engines are not running, or steam supply is not available, engine cooling water must be drained from system of engine shut down, two engines if necessary. Steam heat and wash water systems must be given attention in accordance with instructions for draining passenger cars when left off steam.

When necessary to haul an RDC car in a train without either diesel engine running, the main battery switch **MUST** be closed, to provide ROLOKRON (wheel slide) protection. All lights and air conditioning **MUST** be turned off, to avoid serious battery discharge. If electrical trouble necessitates hauling car with main battery switch open, the engineman and conductor must be so advised so that all precautions may be taken to avoid wheel sliding.

RDC cars left unattended must have hand brake applied. If on grade, chain or block wheels.

RDC cars hauled in trains must have air brake and electrical equipment conditioned in accordance with existing instructions.

AIR BRAKES.

Passenger trains containing more than 20 passenger carrying type cars must not exceed 30 cars.

Mail, Express and Baggage Equipment Trains must not exceed 40 cars.

When Passenger Train Equipment Cars are handled with Freight Equipment Cars in freight trains exceeding 40 cars total, such Passenger Train Equipment Cars shall be handled forward of the 40th head car with not to exceed 20 such cars in one train. The total of all cars in the train shall not exceed: (a) 150 cars when handling one (1) to five (5) Passenger Equipment Cars; or (b) 100 cars when handling more than five (5) Passenger Equipment Cars.

NOTE: Passenger Train Equipment Cars having Type AB-1-B brakes may be handled in freight trains without restriction.

In trains of over 30 cars, passenger car brake equipment shall be conditioned for DIRECT RELEASE on cars beyond the 20th head car. In freight trains of over 40 cars, all cars must be conditioned for DIRECT RELEASE and the air supply to water raising system shall be cut out.

Flexi-Van trains must have brake pipe feed valve adjusted to 90 pounds.

Lake Division

Carson.

When southbound freight trains stop at Carson to make a pickup of cars, and the total cars of the train after picking up is 90 or more, the engineman will wait 10 minutes before proceeding after air test is made and train ready to depart, to insure the release of the air brakes.

DIESEL EQUIPMENT:

A. Movement of Diesel Units.

1. Road Freight and Road Switch Type Units.

Road Freight and Road Switch Type units may be operated, coupled together, with a maximum of twelve (12), including those hauling train and those in tow.

The total number of units hauling train may not exceed seven (7).

The Units being towed may be either dead or on idle.

2. Yard Switch Type Units.

Only one yard switch type unit, dead or on idle, whether hauling or being towed, should be placed on rear of locomotive consist and on head end of train. Additional switch type units should be placed in train in accordance with Air Brake Rule 1612.

3. Backing Trains With Road Switch and Yard Switch Type Units Hauling Or In Tow.

Sufficient lead units must be isolated, and power of not more than three (3) rear hauling units used against the train.

B. Leaving Diesel Locomotive Unattended (Engines Running)

*1. Apply Independent Brake Full On.
2. Place automatic brake in running position.
3. Place throttle in idle, selector handles in "Off" and remove reverser handle.
4. Pull out generator field switch or, if equipped, place generator field circuit breaker in "Off". (Leave all other switches and circuit breakers in running position if desired.)
5. Apply hand brakes.
6. If on grade, chain or block wheels.
7. All electric control jumpers must remain connected between units.

*Note: Locomotives conditioned for towing, or movement "Dead" in train, or to be picked up by switching crews, may be left with the Independent Brake in running (release) position.

C. Air Brakes.

Diesel road locomotives with 24-RL brake equipment must have Rotair Valve positioned as follows:

ROTAIR VALVE operating "A" unit set in "PASS." position.

ROTAIR VALVE trailing "A" unit set in "PASS. LAP" position.

D. Passing Over Railroad Crossings at Grade.

When crossing a railroad crossing at grade, throttle should be moved back to Run 3 at least 8 seconds before reaching the crossing and kept in that position until all locomotive units have passed over the crossing.

E. Diesel stopping over open flames.

Diesel engines must not be stopped over burning fusees or other open flames, lights or fires when it can be avoided. When so stopped and engine cannot be promptly moved, the fusees or fire must be extinguished. Open flame switch heaters must be relighted after the engine has been moved.

LUBRICATION AND CARE OF JOURNAL BOXES

New York Central System locomotives and passenger cars with roller bearings are equipped with Hot Box Alarms. In the event that any of these bearings become overheated a strong and somewhat disagreeable odor is released and also a dense white smoke. Trainmen, Enginemen and other employees will be on the lookout for these indications and whenever they are observed the train must be stopped immediately. When the overheated roller bearing is located it must be given the usual attention in accordance with prescribed practices.

When a journal equipped with a lubricating pad is found overheating enroute, train must be stopped and examination made. The lubricating pad must be adjusted or replaced with an oil saturated pad in good condition if this will overcome

trouble. If cause of heating cannot be corrected in this manner or car cannot be moved to the next terminal through use of cooling compound, car should be set out.

Water or snow should not be used for cooling hot journals except in emergency, and when used, journal should be cooled as slowly as conditions will permit.

When cars with hot journals are set out where inspectors do not take immediate charge, precaution must be taken to know that journal is left in condition to avoid damage to car by fire.

Conductor must make prompt report to Transportation Superintendent and car foreman of cars treated enroute, or set out account overheated journal, stating whether treated by cooling compound or by water or snow, also whether heating was detected by odor or smoke of Hot Box Alarm.

COOLING COMPOUND

An approved hot journal cooling compound, and Form NYCS RS-74, furnished by storekeeper, shall be carried as part of caboose equipment and train crew equipment in passenger service.

Cooling compound shall be used for emergency treatment of overheated journals of cars enroute in trains. Treatment should be given before journal becomes red.

Journals with broken brasses shall not be treated with cooling compound.

When applying cooling compound, it shall be placed along full length of rising side of journal; particular attention to be given to placing compound at back or inside end of journal. Cars having journals treated with cooling compound shall be tagged in a prominent place near journal, using Form NYCS RS-74, at time compound is applied.

INSTRUCTION FOR HANDLING PASSENGER CARS WITH FLAT WHEELS ENROUTE.

1. When flat spots are developed on wheels of a train enroute due to emergency or unduly heavy service brake application, train crew in charge will proceed as outlined in paragraphs 2 and 3, before proceeding to the next terminal.
2. Before proceeding, dispatcher should be notified and advised that wheel inspection may be necessary at next terminal.
3. When leaving a point where an incident resulting in flat spots occurred and while running at SLOW SPEED, the Conductor in charge shall pass through each car in the train to ascertain by sound and operation, whether train may continue at normal speed to the next inspection point. If in his judgment it is necessary to do so, the Conductor should signal the engineman to stop for special inspection.
4. If flat spots occur from stuck brakes, hand brakes set up, seized bearings etc., train crew must make necessary inspection to determine extent of wheel damage, safe speed of train to next terminal or whether car must be set out.
5. When it is necessary to make a terminal inspection for flat wheels on a through train, competent supervision and inspectors must be used.
6. If advance notice is available, men must be lined up so that cars will pass by them so they can observe the condition of the wheels.
7. Sufficient time must be taken to properly examine wheels to locate flat spots, moving train for complete inspection as necessary. Succeeding terminals must be informed as to results of such inspection.
8. If flat spots are found, restrictions are to be observed, as follows:

Size of Flat Spot	Restriction
Less than 2″	No restriction.
2″ to 2½″ inclusive	Speed not to exceed 40 MPH.
Over 2½″	Speed not to exceed 20 MPH to nearest point where car can be set out of train.

9. Two or more adjoining or overlapping flat spots each 2″ or over in length are to be treated in accordance with restrictions for flat spots of over 2½″.
10. It is to be understood that the above dimensions refer to a flat spot slid to these dimensions and does not represent several small shallow spots.
11. Built-up metal should be removed from wheel treads, if possible. Cars having built up metal not in excess of 1/32″ depth may continue to destination without restriction. When built-up metal exceeds 1/32″ depth, and cannot be removed, restrictions for flat spots over 2½″ should apply.
12. When it is necessary to move cars through to a terminal where equipment is available to transfer passengers, or mail and express into, a competent supervisor, if available, or a competent inspector must ride the train to observe (a) effects of damaged wheels on performance, (b) to supervise the speed of the train, (c) to advise next inspection point of any additional or special attention required.
13. When reporting flat spots on wheels, it is important that the dimensions be properly designated to avoid confusion.

FATALITIES.

When a passenger dies in a sleeping car, the body may be left in berth properly screened until removed from train; when in parlor car or coach, body should be removed to baggage car and physician secured if available on train, who may certify as to cause of death.

The body of a person who dies on a train must be left at first station stop where a Health Officer is available and station employe on duty. Station employe must not permit the body to be removed from station without proper authority. If person who dies is accompanied by an attendant, conductor must confer with attendant as to disposition of body, and such information must be given to the station employe.

If train stops at a station other than where the body can be removed, conductor will give advance notice to the station where the body is to be left, and station employe must notify Health Officer promptly.

Where the body of a person meeting violent death or death from unknown cause is located on railroad property, other than aboard train, the body should not ordinarily be moved from the place where found unless the Coroner is first notified and his permission is received to remove the body; but if it is apparent that the Coroner's permission cannot be secured without undue delay to trains, the body may first be moved to a position where trains can conveniently pass, after noting its position and condition for the Coroner's information. This is particularly important where death appears due to foul play. In all cases an employee must be left with the body until arrival of the Coroner.

RAIL DETECTOR CARS AND CLEARANCE CAR X-8016

Cars Operating Under Own Power:

Cars must be brought to full stop before movement is made on to turn tables.

Trains or engines must not be permitted to follow such cars into block between open signal stations in ABS territory or between controlled signals in TCS territory.

Cars approaching highway crossings which are provided with automatic protection, must not pass over crossings until Manual protection is provided, unless it is known that the automatic protection is functioning.

At railroad crossings, where automatic interlocking is in use, such cars will come to a stop and must not proceed over crossings until all instructions covering emergency use of such crossings have been complied with.

At interlockings, remote controlled locations, and in TCS territory, switches in route taken by these cars will not be operated until it has been ascertained that movement through the route has been completed.

In ATS territory, if car is not equipped with ATS device, movements will be made in accordance with Time Table Special Instructions governing such moves, except that train dispatcher will arrange for clear block between open signal station and in TCS territory, between controlled points, both in advance and in rear of car.

Cars X-8015 and X-8016 are equipped with ATS devices for forward and reverse operation and rules governing such operation will apply.

When Towing Cars in Train:

During freezing weather, if heat is not provided in car domestic water must be drained. Diesel engine and car heating water, if not protected with antifreeze solution, must be drained.

Rail detector cars, other than NYC, must not be handled in freight or passenger trains.

NYC cars X-8015 and X-8016 may be handled on rear end of passenger and freight trains, see speed restrictions.

Car X-8016 must be coupled to train at No. 1 end of car.

Car must not be coupled between a locomotive and any other car while switching at any time.

If fuel tanks have not been drained, they should be placarded as "Inflammable Material".

AUTOMATIC TRAIN STOP.

Enginemen must be qualified on Rules for the Operation of Automatic Train Stop.

Engines operated between BV and BE via Lake Front and between QD and BE, via CUT; between BE and B, Swan Creek and Alexis, B and Englewood main line, and between Porter and Ivanhoe main track, must be equipped with automatic train stop device in working order, and cut in, except:

a. When used as a pusher or second engine.

b. In emergency and by specific authority of Transportation Superintendent.

c. When automatic train stop device becomes inoperative after leaving terminal, train must be operated in accordance with signal indication but not exceeding 40 MPH. Enginemen must notify Transportation Superintendent at first point of communication and relief engine, if available, must be obtained at the first engine terminal. When instructed verbally at the first point of communication by train dispatcher or signalman, the train may proceed on signal indication, but not exceeding 79 MPH, keeping clear of occupied block. After waiting two minutes at Stop and Proceed Signal Rule 291 it may be regarded that there has been a failure of wayside signal and train may proceed in accordance with the rule. Train must not pass Restricting signal Rule 290 except when permitted by dispatcher or signalman under authority of the Transportation Superintendent.

d. Engines not equipped with automatic train stop device, operating in switching service, may be operated on main track within territories specified below at a speed that will permit stopping short of another train or obstruction, but not exceeding 20 MPH.

Lake Division

CP 89 and Wesleyville	6.7 miles.
Ashtabula	3.0 miles.
BR and Wickliffe	3.0 miles.
BE and DB via Lakefront or Linndale	11.5 miles.
BR and DB	10.4 miles
Linndale and CUT	5.6 miles
DB interlocking limits	1.0 miles.

Toledo Division

CP207 and Engine terminal	2.2 miles.
CP240 and CP242 Sandusky	2.0 miles.
CP285 and Nasby	6.7 miles.
Swan Creek and Alexis	7.5 miles.
Goshen and Elkhart	10.9 miles.

Western Division

Elkhart and South Bend	10.3 miles.
South Bend	2.4 miles.
La Porte between WR & JD	1.3 miles.
Indiana Harbor and Englewood	10.4 miles.

---

e. Engines not equipped with automatic train stop device operating in yard, puller, transfer or service other than switching service may be operated on main track within the territories specified below at a speed that will permit stopping short of another train or obstruction but not exceeding 20 MPH. When instructed verbally by train dispatcher or signalman, train may proceed on signal indication but not exceeding 40 MPH, keeping clear of occupied block. After waiting two minutes at Stop and Proceed Signal Rule 291 it may be regarded that there has been a failure of wayside signal and train may proceed in accordance with the rule. Train must not pass Restricting Signal Rule 290 except when permitted by dispatcher or signalman under authority of the Transportation Superintendent.

Lake Division

Location	Type of Service	Miles
BR and DB	Puller	10.4
BE and DB Via Lakefront or Linndale	Puller	11.5
BE and Linndale	Puller	6.4

Toledo Division

Location	Type of Service	Miles
CP207 and Engine Terminal	Yard	2.2
Huron and Gypsum	Work Train	20.0
CP240 and CP242 Sandusky	Yard	2.0
CP285 and Nasby	Yard	6.7
Swan Creek and Alexis	Yard	7.5

Western Division

Location	Type of Service	Miles
Indiana Harbor and Englewood	Puller	10.4
South Bend	G.T.W. Engines	1.3
Elkhart and La Porte	Lite Engines	43.0

When acknowledging whistle fails to sound while acknowledging a restrictive signal indication, engineman will reduce speed of train to not exceeding 40 MPH and notify Transportation Superintendent at the first point of communication where stop can be made without excessive delay. When instructed verbally by train dispatcher or signalman, train may proceed on signal indication but not exceeding 79 MPH, keeping clear of occupied block. After waiting two minutes at Stop and Proceed Signal Rule 291 it may be regarded that there has been a failure of wayside signal and train may proceed in accordance with the rule. Train must not pass Restricting Signal Rule 290 except when permitted by dispatcher or signalman under authority of Transportation Superintendent. If engineman has occasion to again acknowledge a signal indication as prescribed by the rules and the acknowledging whistle sounds, normal speed may then be resumed. Failure of acknowledging whistle to sound must be reported to Division Superintendent on Form SC-1.

Should signal aspect change after acknowledging handle has been moved to acknowledging position, the train must be operated in accordance with the more restrictive indication

---

Engines equipped with ATS device operating in territories not equipped with wayside train stop control equipment must have train stop equipment cut in and operative, with MG sets running, on lead unit of all locomotive consists.

HANDLING TRAINS ON GRADE

Lake Division

Between Cassadaga and Fredonia northward, before descending grade, brake pipe pressure must be increased to 90 lbs.

Between Carson and Ashtabula Harbor.

Before descending Carson grade it must be known the trainline is fully charged. Conditions permitting, engineman having been especially qualified by Road Foreman in feed valve method of braking freight trains may use that system of braking trains; if locomotive is equipped with 26-L brake equipment, minimum reduction position of automatic brake valve should be used. Trains destined main line East must stop in vicinity of CP-124 to release brakes in accordance with Air Brake Rules. All freight trains descending grade being stopped for any purpose must not be started until a total 20 lbs. brake pipe reduction has been made and after moving brake valve to running position, train must remain standing for no less than 5 minutes (no less than 7 minutes if brakes applied in emergency) and trainline is fully recharged.

Cleveland Union Terminal: Engineman, on arrival at station, will apply automatic brakes and will not release them until instructed by car inspectors.

When performing switching service, on either end of trains, engineman will not release brakes until after cuts are made and receives signal to move, to prevent brakes being released on portion of train remaining.

SPEED RESTRICTIONS

Speed restrictions are shown in miles per hour and apply to entire train.

GENERAL

(Unless otherwise restricted)

Engines:

Nos. 1000 to 8357, light or with cabooses, limited to maximum track speed but not to exceed.....60

Nos. 575 to 957, **8400 to** 9646, **light or with cabooses, limited to maximum track speed but not to exceed 45**

***Nos. 1000 to** 2476, 3300 to 5104 **6600 to 6903, operating backward..... .....30**

*Nos. 1000 to 2476, 3300 to 5104 and 6600 to 6903, operating backward at night over public cossings 15

Nos. 575 to 957	45	Nos. 5801	85
1000 to 1123	65	5802 to 5805	65
2400 to 2476	65	5806 to 5807	85
2500 to 2529	71	5808 to 5827	65
3300 to 3372	65	5900 to 5927	65
3702 to 3709	70	5928 to 5945	85
3804 to 3821	70	5946	65
5006 to 5017	65	5947 to 5948	85
5102 to 5104	65	5949 to 6022	65
5600 to 5610	65	6023 to 6024	85
5611	70	6025 to 6038	65
5612 to 5742	65	6039 to 6040	85
5743 to 5745	85	6041 to 6075	65
5746 to 5749	65	6100 to 6114	65
5750	85	6115 to 6119	71
5751 to 5752	65	6120	65
5753	85	6121 to 6124	85
5754 to 5757	65	6125 to 6127	71
5758	85	6200 to 6236	60
5759	65	6600 to 6903	70
5760	85	7000 to 7012	70
5761	65	7100 to 7118	65
5762 to 5763	85	7300 to 7301	65
5764	65	8000 to 8024	65
5765 to 5775	85	8100 to 8113	60
5776 to 5778	65	8200 to 8248	65
5779	85	8249	85
5780 to 5781	65	8250	65
5782 to 5785	85	8251 to 8254	85
5786 to 5788	65	8255 to 8265	65
5789 to 5791	85	8266 to 8267	85
5792 to 5793	65	8268 to 8269	65
5794 to 5799	85	8270	85
5800	65	8271 to 8272	65
		8273	85
Nos. 8274 to 8285	65	Nos. 8318	85
8286	85	8319 to 8346	65
8287 to 8288	65	8347 to 8348	75
8289	85	8349 to 8350	65
8290 to 8292	65	8351	85
8293 to 8294	85	8352 to 8357	65
8295	65	8400 to 9646	45
8296	85		
8297 to 8317	65		

NOTE: When handling Flexi-Van trains, 65 MPH engines may operate at speed not exceeding 70 MPH.

In emergency, when necessary to handle passenger trains with 65 MPH engines such engines may be operated at speed not exceeding 70 MPH to a terminal where passenger power is available

***An engine consisting of more than one unit is considered as operating backward when the employee in the leading unit does not have full control of the engine.**

45 MPH NYC engines may be operated at a maximum speed of 60 MPH when coupled as a trailing unit with other units or when handled dead in train.

Flexi-Van cars, series 9700 to 9899 inclusive may be handled in passenger, mail, express and/or deadhead equipment trains, at speeds shown for passenger trains.

Trains or engines operating against the current of traffic in ATS territory where wayside equipment for automatic train stop device is not provided for reverse movements, limited to maximum track speed but not to exceed.....79

Diesel engines operating through water..... 3

Note:—Diesel engines must not be operated through water more than 3 inches above top of rail.

Clearance car X-8016, under own power or being towed.....55
Rail detector cars, under own power or being towed.....40
Trains handling cars equipped with K type brakes.....40
Snow plows and flangers.....35
Trains handling Speno Ballast cleaning equipment.. 30
Circus trains with freight equipped cars.....30
Trains with snow loader units not in service.....30
Trains with loaded ore cars less than 25 feet in length.....30
Work trains with cranes moving on own wheels.....30
Revenue trains with cranes moving on own wheels.....25
Trains with scale test cars or Jordan spreader.....25
At night, over facing point hand operated switches, when operating against the current of traffic in Automatic Block Signal System territory where switch lights are not in use....15
Switches and crossovers not interlocked, when diverging unless otherwise authorized.....15

LAKE DIVISION

(Unless otherwise restricted)

	Main Line Tracks 1 and 2	BV to BR Tracks 3 and 4	Youngstown Branch	Jefferson Branch	Sharon Branch	Oil City Branch CP 14 to Oil City	JF&C Branch Polk Jct. to Rose	Valley Branch
Passenger, Mail, Express and Deadhead Equipment Trains.....	80	50	50	20	20	30	30	30
With freight equipment cars, except freight flexi-van cars.....	60	50	50	20	20	30	30	30
*Flexi-Van Trains, Mail, Express and Deadhead Equipment Trains with freight FlexiVan cars.....	70	50	50	20	20	30	30	30
Freight Trains.....	60	40	50	20	20	30	30	30
Trains handling cranes in wrecking service								
Trains with cranes X15 and X16.....	45	30	35	20	15	30	25	..
Trains with cranes X26, X43, X50, X59, X61, X62, X63 and foreign cranes under 250 ton capacity	35	30	35	20	15	30	25	25
Snow plows and flangers.....	35	30	35	20	20	30	30	20

*A Flexi-Van train is a freight train consisting of Flexi-Van equipment and/or multi-level automobile carrying cars and flat cars carrying trailers in piggy-back service, with or without passenger equipment cars and freight cabooses.

Portager cars GMD X405 and X406, when operating in flexi-van trains, may be operated at flexi-van speed.

LOCAL
(Unless otherwise restricted)
Erie Main Line

Main Line
*Trains operating on controlled sidings....30
*Applies to head end of train.

Trains with cranes X14 or X15 will stop and proceed carefully by station platform at Dunkirk.

Ashtabula: OD Tower railroad crossing, interlocked
Passenger, Mail, Express, Deadhead Equipment and Flexi-Van Trains....50
Freight Trains..... No. 1 and No. 2 tracks....40
No. 3 and No. 4 tracks....30
No. 3 track between MP 127.9 and MP 129.1....15
Painesville, First curve east....70
Willoughby, on curve....70

Youngstown Branch
Ashtabula: Between OD Interlocking and NP Interlocking.20
Northward freight trains CP4 to NP Interlocking....30
Southward freight trains NP Interlocking to CP4....40
Passenger trains and engines between NP Interlocking and CP4....40
Between CP4 and MP6....20
Between MP6 and MP9....40
Fire Proofing curve 0.6 miles north of CP56....40
Between CP56 and Valley Street....40
Between Valley Street and NYC Jct. (Youngstown)....30
Ashtabula: Northeast wye....10
Ashtabula: Northwest wye....10
Ashtabula: Southeast wye....15
Ashtabula: Southwest wye (North track)....15
Ashtabula: Southwest wye (South track)....10
OD Interlocking to Ashtabula Harbor drawbridge, inclusive: Freight trains....15
Hot metal run, with loaded cars....10
Hot metal run, with empty cars....20

Sharon Branch
Sharon: Through City....5
Hot metal run, with loaded cars....10
Hubbard—North Main Street Crossing....10

Oil City Branch
Polk Jct. to Franklin....25
Franklin....5
Franklin to Oil City....15
Oil City Tunnel....5

JF&C Branch
Cut at MP 125.7....10
East end No. 1 Tunnel at MP 79.9 to 800 feet east....10
Proceed with caution at all exposed points looking out for slides and falling rock, at all points east of Stoneboro, on the Oil City and JF&C Branches.

Valley Branch
Between Lakeside and Laona:
Freight trains....25
*Dunkirk-Nickel Plate Crossing between home signals....20
MP 3.5, Fredonia, N.Y. to MP 7.9....15
MP 15.0 Cassadga to MP 26.5 Gerry....15
Bridge 21.90....5
Bridge 26.27....10
Bridge 29.64....5
Bridge 47.77....5
Bridge 60.16....10
Bridge 60.48....10
Bridge 82.17....10
Bridge 87.59....5
Bridge 88.57....5
Warren: Through city....5
*Falconer Junction: EL Crossing between home signals....20
*Applies to head end of train.

LAKE DIVISION
(Unless otherwise restricted)

	Main Line BR and BE via Lake Front Tracks 1 and 2	Main Line BR and BE via Lake Front Tracks 3 and 4	QD and Belt Jct via CSL Tracks 3 and 4		QD and Linndale via CUT Tracks 1 and 2	DB and Clark Ave	Linndale and BE Tracks 1 and 2	Alliance Branch	LE & P Branch
Passenger, Mail, Express and Deadhead Equipment Trains.	70	25	40	40	60	30	70	30	30
With freight equipment cars, except freight Flexi-Van Cars.	60	25	40	40	40	30	40	30	30
*Flexi-Van Trains, Mail, Express and Deadhead Equipment Trains with freight Flexi-Van Cars	70	25	40	40	60	30	70	30	30
Freight trains	60	25	40	40	40	30	40	30	30
Trains handling cranes in wrecking service									
Trains with cranes X15 and X16	40	25	40	40	40	30	40	30	30
Trains with cranes X26, X43, X50, X59, X61, X62, X63 and foreign cranes under 250 ton capacity.	35	25	35	35	35	30	35	30	30

*A Flexi-Van train is a freight train consisting of Flexi-Van equipment and/or multi-level automobile carrying cars and flat cars carrying trailers in piggy-back service, with or without passenger equipment cars and freight cabooses.
Portager cars GMD X405 and X406, when operating in flexi-van trains, may be operated at flexi-van speed.

LOCAL
(Unless otherwise restricted)
Cleveland Subdivision:

BR and BE. via Lake Front:
Passenger, Mail, Express, Deadhead Equipment and Flexi-Van Trains:
BR No. 1 and No. 2 tracks between home signals....60
BE No. 1 and No. 2 tracks between home signals....60
Between Belt Jct. and BE No. 3 track....15
Between Double track and QD Int. No. 4 track....10

Cleveland Short Line:
All trains:
Through tunnels....25
Between SL Int. and Belt Jct. No. 3 track....15

QD and Linndale, via CUT:
Curve between E. 140th St. and Coit Rd....35
Superior Ave. curve: No. 1 track....45
No. 2 track....35
Between East Cleveland and E. 34th St., No. 1 and No. 2 tracks....50
Between east end of E. 34th St. curve and east end Central Ave. curve:....No. 2 track....40
Central Ave. curve....25
Between east end Cuyahoga viaduct and Clark Ave: No. 1 track....40
No. 2 track....30
Through crossovers and turnouts leading to and from Nickel Plate tracks at E. 34th St., E. 9th St. and W 25th St....15

Linndale and BE.
BE No. 1 and No. 2 tracks between home signals....60

DB and Clark Ave.
Between DB and SM....15

Alliance Branch:
Freight trains:
Newton Falls, Bridge St....10
MP 16.5 to MP 17.8, between Palmyra and North Benton.15
MP 26.5 to MP 42.0, Mt. Union to Minerva....15
Tunnel No. 59.85, one mile North of Bergholz....15
Between Phillips and Jensie mine....15
Bridge 74.08, Pan....20
LE & P Branch:
Boston Ledges, one mile east of Brandywine....20

Toledo Division
(unless otherwise restricted)

	Main Line Tracks 1 and 2 BE and B	Old Road Branch	Fort Wayne Branch South of Hillsdale	Fort Wayne Branch North of Ft. Wayne Jct.	Manchester Branch	North Adams and Ida Branches	Morenci Branch	Shipshewana Branch	Norwalk Branch	Litchfield Branch
Passenger, Mail, Express and Deadhead Equipment Trains....	80	40	30	30	30		20	15	30	..
With freight equipment cars, except freight Flexi - Van Cars.....	60	40	30	25	30	25	20	15	30	..
*Flexi - Van Trains, Mail, Express and Deadhead Equipment Trains with freight Flexi-Van Cars.....	70	40	30	30	30	25	20	15	30	..
Freight trains	60	40	30	25	30	25	20	15	30	15
Trains handling cranes in wrecking service:										
Trains with cranes X15 and X16.....	45	35	..	..	..	..	..	..	30	..
Trains with cranes X26, X50 and X63.....	35	25	15	15	20	20	..	..	30	..

*A Flexi-Van train is a freight train consisting of Flexi-Van equipment and/or multi-level automobile carrying cars and flat cars carrying trailers in piggy-back service, with or without passenger equipment cars and freight cabooses.

Portager cars GMD X405 and X406, when operating in flexi-van trains, may be operated at flexi-van speed.

Local
(Unless otherwise restricted)

Main Line.

All trains operating on controlled sidings.....30

Passenger, Mail, Express, Deadhead Equipment and Flexi-Van Trains:

No. 1 and No. 2 tracks curve east of CP 207 and 1,300 feet west of station, Elyria.....70

No. 1 and No. 2 tracks Vermilion curve.....70

Vickers: CP285, railroad crossing interlocked, Passenger, Mail, Express, Deadhead Equipment and Flexi-Van trains.....60

Between:	**Tracks 1 and 2**
CP 285 and CP 286.....	60
CP 286 and CP 288.....	35
CP 288 and Swan Creek.....	50
Swan Creek and Nasby.....	60
Swan Creek and crossover north of Sylvania Avenue	45
Crossover north of Sylvania Avenue and Alexis.....	60

Freight Trains and Light Engines:

	Tracks 1 and 2
Between CP 285 and CP 286.....	45
Between CP 286 and Swan Creek.....	30
Between Swan Creek and Nasby.....	50
Between Swan Creek and Alexis.....	30

Trains having ore cars under 25 feet in length loaded 180,000 to 210,000 lbs. will be governed by the following speed restrictions:

Huron: Bridge No. 106, Huron River.....10

Toledo: Bridge No. 1, Maumee River.....10

Trains:

Shawville Elyria: North siding between CP 203 and CP 207.15

Huron: South controlled siding between CP 232 and CP 234.15

Sandusky: Campbell Street .. South siding 10

North and South controlled siding between CP 242 and CP 244.....15

Port Clinton: North controlled siding.....15

Toledo passenger station: all tracks.....10

Light engines entering or leaving Toledo passenger station.10

Between CP 286 and Rockwell Jct.....30

Alexis: through crossover.....25

Alexis: Ann Arbor connection.....10

Bridge No. 10 over Ten Mile Creek: Southeast of Royster Guano Plant..... 5

SA: through interlocking.....15

Stanley Yard: facing point movements over spring switches.15

Elkhart: Main street crossing.....20

Trains: **Norwalk Branch**

Norwalk: Whittlesey, Foster and Milan Ave.....10

Prospect and Wooster Streets 10

Monroeville: Monroe St. West of station.....10

Between home signals.....20

Bellevue: Between home signals.....20

Clyde: Main St. Route 101.....10

Fremont: Croghan and Garrison Streets 10

Birchard Ave 10

Freight Trains:

Bellevue, east yard limit board.....15

Old Road Branch

Trains:

Between Vulcan and Sylvania.....20

Through Sylvania.....15

Riga: Between home signals DT&I Automatic interlocking.....20

Lenawee Jct.: East switch siding, when diverging...10

Through Adrian.....15

Hillsdale: Over street crossings.....15

Coldwater: Over Division St.....10

Sturgis: Between home signals.....20

Over Magnolia St.....10

White Pigeon Jct.: Trains entering or leaving Michigan Division main track.....15

Shipshewana Branch

Trains operating on the Shipshewana Branch West of Middlebury proceed at restricted speed expecting to find main track occupied between a point approximately 4,000 feet east of Route 20 overpass and a point approximately 1,100 feet west of the west siding switch at Middlebury.

Fort Wayne Branch

Reverse curve south of Hillsdale.....25

Bankers: Curve at station.....25

Bankers: To yard limits at Hillsdale over all bridges.....25

Reading: Over Maple St..... 5

Over Elm St.....10

Angola: Over U. S. Route 20..... 5

Over U. S. Route 27 10

Between Waterloo and Fort Wayne.....20

Auburn: Over first streets north and south of station..... 5

*Ft. Wayne: Nickel Plate crossing between home signals..20

Manchester Branch

Manchester..... 5

Bridge No. 46, 1 mile south of Manchester.....15

Clinton.....15

Tecumseh 5

Raisin Center: Between home signals.....20

Ida Branch

Petersburg..... 5

Over DT&I crossing..... 20

Ida: **Over highway, east of station**..... 10

Morenci Branch

Morenci 6
Grosvenor: Bridge No. 60, two miles west 5

Elyria and South Lorain

All trains 20
Northward trains and engines between wye connections and Route 20 10

CP 240 and CP 242 via Sandusky Pier

Freight trains 15

LaCarne Wye and Camp Perry

All trains 25

*Applies to head end of train.

Western Division

(Unless otherwise restricted)

	Main Line B and Chicago 61st St. Tracks 1 and 2	Main Line B and Chicago 61st St. Track 3	Main Line B and Chicago 61st St. Track 4	Porter Ivanhoe Branch Tracks 1 and 2	Joliet Branch	Kankakee Branch	E&W Branch
Passenger, Mail, Express and Deadhead Equipment trains	80	30	30	60	40	49	..
With freight equipment cars, except freight Flexi-Van Cars	60	30	30	60	40	49	..
*Flexi-Van Trains, Mail, Express and Deadhead Equipment Trains with freight Flexi-Van Cars	70	30	30	60	40	49	15
Freight Trains	60	30	30	60	40	49	15
Trains handling cranes in wrecking service	45	30	30	45	30	30	..
Trains with cranes X26, X43, X50, X59, X61, X62, and X63	35	30	30	35	35	35	..

*A Flexi-Van train is a freight train consisting of Flexi-Van equipment and/or multi-level automobile carrying cars and flat cars carrying trailers in piggy-back service, with or without passenger equipment cars and freight cabooses.

Portager cars GMD X405 and X406, when operating in flexi-van trains, may be operated at flexi-van speed.

Local

Main Line
*Trains operating on controlled sidings 30
*Applies to head end of train.
Elkhart: Main St. crossing 20
Mishawaka: Hygrade: All engines 5
South Bend: Curves Arnold St. to Michigan St. incl 50
South Bend: Grand Trunk switch engines 15
South Bend: Switch engines, engines Nos. 506 to 957, 8400 to 9646 without cars through HF Interlocking 15
No. 2 track between MP 474 and MP 470 70
No. 1 track between MP 470 and MP 474 70
Eastward trains between MP 507 and MP 505 55
Westward trains between MP 505 and MP 507 55
South Chicago: Belt Ry. connection 10
Englewood and Indiana Harbor inclusive, engines Nos. 506 to 957, 8400 to 9646 without cars 15

To discharge U. S. Mail:
No. 14, South Bend 30
No. 39, Gary 15
No. 354, Gary 30

Jackson, Elkhart Branch

Elkhart: B, between home signals 20

Porter Ivanhoe Branch

Gary, over street and road crossings within city limits 45
East Gary, over street and road crossings within city limits 35
Crisman:
Sand Pit track—between switch and US Route 20 15
—north of US Route 20 5

Joliet Branch

East Gary, over street and road crossings within city limits 35
Liverpool, between interlocking home signals 20
South Gary, turn-out to Glenn Park side track, when diverging 10
Griffith, eastward trains between interlocking home signals 20
Hartsdale, between interlocking home signals 20
Dyer, between interlocking home signals 20
Chicago Heights, through yard limits 20
Joliet EJ&E crossing between interlocking home signals .. 20
Joliet, CRI&P interlocking switches in old main track and track 67, and turn-out to yard track, when diverging 10

Kankakee Branch

South Bend: On Main track between Arnold St. and JK 20
*Olivers: Michigan Division and GTW Crossings, between home signals 20
Rupel: Western Indiana Sand and Gravel Co. track 5
*North Liberty: Center Street crossing 40
*Walkerton Interlocking: At approach signals 30
Walkerton: NYC-B&O wye track 10
*Hamlet: Westward approach signal 40
Knox: Heaton to Bender St. crossings, inclusive 25
*North Judson Interlocking: At approach signals 30
*San Pierre: Eastward and westward approach signals 40
Kersey: Industrial track 5
*Schneider: Westward approach signal 40
Delmar Interlocking: CMStP&P crossing 25
*Delmar: Westward approach signal 45
*MJ Interlocking: Between home signals 20
*Kankakee Interlocking: Between home signals 20
*GM&O crossing Diwght: Approach signals 40
*Streator Jct., GM&O crossing: Between home signals 20
Between Streator Jct and Streator: On curves 25
*Streator AT&SF crossing: Between home signals 20
Streator: Bloomington St. curve 10
Lostant Interlocking: ICRR crossing 25
*Signal K180.1 25
Between Streator AT&SF crossing and Seatonville Jct 40
Westward only, between one mile east and one-quarter mile east of east switch at Moronts 30
Illinois river bridge: Between home signals 15
Between Seatonville Jct. and LX 25
Between LX and NYC Jct 15
Churchill Branch 15

Seatonville—Seatonville Jct.:
Trains will approach Seatonville at slow speed and will run between Seatonville Jct. and Seatonville, expecting to find main track occupied.

(*) Applies to head end of train.

E&W Branch

Elkhart: Over Edwardsburg Ave 5
Mishawaka: Twin Branch tracks 5

ENGINE AND CAR RESTRICTIONS

Engines and Cars must not be operated as shown below:

Cars weighing over 263,000 lbs. cannot be handled without permission from the Transportation Superintendent except where this weight is further restricted as follows:

Lake Division

Dunkirk to Titusville.....177,000 lbs.
CP-14 to Oil City.....220,000 lbs.
Polk Jct. to Rose.....220,000 lbs.

Toledo Division

Grosvenor to Morenci.....160,000 lbs.
Waterloo to Haires.....220,000 lbs.
Goshen to Shipshewana.....220,000 lbs.
White Pigeon Jct. to Jonesville.....177,000 lbs
Hillsdale to North Adams.....220,000 lbs.
Lenawee Jct. to Manchester.....220,000 lbs.

Western Division

Seatonville Jct. to Churchill .....220,000 lbs.

On industrial sidings with sharp curvature and not shown care must be used in operating.

Maximum gross weight of cars handled through retarders 240,000 lbs.

Quadruple loads are to be handled with care at all terminals with minimum of switching and they are not to be humped.

Lake Division

Main Line BV to BE

Brocton:
Huntley Mfg. Co. No. 2 on coal trestle.....All engines.
North East:
Electric Material Co. Private tracks in shop...All engines.
Willoughby:
The Browning Co., inside building..... All engines.

Valley Branch

Between Dunkirk and Titusville:
Engines Nos. 526 to 566, 1000 to 1603, 1606 to 1877, 2414 to 2475, 3307 to 3311, 3323 to 3821, 4000 to 4095, 4500 to 5599, 5709 to 5712, 5754, 5755, 5818 to 5827, 5900 to 5903, 5928 to 5948, 6039, 6040, 6076 to 6200, 6210, 6216 to 6999, 7013 to 8099, 8114 to 8199, 8256, 8259, 8315 to 8318, 8330, 8332, 8339, 8341, 8342, 8358 to 8411, 8700 to 9328, 9500 to 9516, 9628 to 9646.

Cleveland Union Terminal

The maximum height of equipment or loads that may be moved is 16 feet 0 inches.

Alliance Branch

Under overhead tipples and between tipple and empty track switch except under the Marion Mine tipple at Hopedale, Ohio.....All engines.

NYCX15 and PRR **99073**, Wrecking Cranes capacity 250 tons must be separated from locomotive and cars weighing in excess of 160,000 lbs. by at least two cars weighing loaded not in excess of 160,000 lbs. each. Speed not to exceed 20 miles per hour.

Toledo Division

Olmsted Falls:
Greenhouse track and United Farmers Exchange track over unloading pits.....All engines
Amherst:
Quarry track beyond sign 15,000 ft. south of Milan Road.....All engines
LaCarne:
Camp Perry tracks.....All engines must stop at buildings and proceed with care, account of close clearances.
Toledo:
Toledo passenger station, tracks adjacent to platform curbs, C&O Diesel Road Switchers Nos. **5570-5595.**
Old Toledo Belt:
Bridge No. 10 over Ten Mile Creek, just southeast of Royster Guano Plant, restricted all engines except engines in following series:
500, 600, 8700, 8800, 8900, 9500-9600.
Swanton:
A. D. Baker Co. beyond sign 800 ft. from main track switch .....All engines.
Home Builders Supply track 100 ft. west of Main Street.....All engines
Delta:
John Pelton Coal Co. beyond east end of bridge.....All engines.
Edgerton:
Coal trestle serving Myers Elevator and Coal Company east of Route 6.....All engines

Old Road Branch

Blissfield:
Great Lakes Sugar Co.: Beyond sign 1,800 feet from main track switch..... All engines

Fort Wayne Branch

North of Fort Wayne Jct.: Main tracks.. .....Engines Nos. **526 to 566, 1000 to 3821, 4040 to 4095, 4400 to** 9646.
Fort Wayne:
Beyond bridge over track serving Eckhart Packing Co. .....All engines and cars

Morenci Branch

Main Track.....Engines Nos. **526 to 566, 1000 to 1603, 1606 to 1877, 2414 to 2475, 3307 to 3311, 3323 to 3821, 4400 to 8411, 8537 to 8539, 8590 to 8632, 8700 to 9516, 9624 to 9646.**
Morenci:
Parker Rust Proof Company east track, beyond north end of the dock, approximately 300 feet from Main Street.....All engines.

Western Division

East Side
Falstaff Brewing Co., over unloading pits 400 feet from stub ends of two southerly tracks:.All engines.
Lehigh
Kankakee Bank Sand Co. beyond R/W Line:..All engines
Huber, beyond sign.....All engines.
Gary:
Gary Lumber Co.: Engines Nos. 1000 to 5104, 6220 to 7012, 7300, 7301, 8223 to 8357.
Bethlehem Steel Plant:
Engine Nos. 1000 through 5104 must not operate beyond fourth switch on lead within Bethlehem property.
Chicago Heights:
Leising Track: Over unloading pit 600 ft. from switch. .....All engines.
Joliet:
Old Quarry lead and other tracks: Engines Nos. 526 to 566, 1000 to 5599, 5608 to 5611, 5709 to 5712, 5900 to 5903, 5928 to 6199, 6220 to 8099, 8223 to 8399, 9104, 9105, 9111 to 9120

RESTRICTIONS FOR WRECKING CRANES:

General Restrictions:

New York Central wrecking cranes shall be separated from any heavy equipment other than motive power by at least one car weighing not more than 103,000 pounds.

Foreign ownership cranes of 250 ton capacity have the same restrictions as cranes X13, X14, X15 and X16.

Local Restrictions:

Lake Division

Valley Branch:
New York Central wrecking cranes shall also be separated from motive power by at least one car weighing not more than 103,000 pounds.
Speed restrictions as follows:
Cranes X13, X14, X15 and X16: Not permitted.
Other cranes: With speed restrictions as follows:
Bridge 26.27, Gerry, N. Y.....10
Bridge 29.64, Gerry, N. Y.....5
Bridge 60.16, Irvineton, Pa.....10
Bridge 60.48, Irvineton, Pa.....5
Bridge 82.17, Selkirk, Pa.....10

Sharon Branch:
Speed restrictions as follows: Bridge 51, Sharon, Pa.
Cranes X13, X14, X15 and X16: Not permitted.
Other cranes.....5

Oil City Branch:
Speed restrictions as follows:
Bridge 82, Turner, Pa., M.P. 32.83.....10

Toledo Division

Old Road Branch:
New York Central wrecking cranes shall also be separated from motive power by at least one car weighing not more than 103,000 pounds.
Speed restrictions as follows:
Bridge 39, Bronson, Mich.
Cranes X13, X14, X15 and X16.....5
Other cranes.....15
Bridge 52, Coldwater, Mich.....15
Bridge 175, Lenawee Jct., Mich.....15

Manchester Branch:

Speed restrictions as follows:
Cranes X13, X14, X15 and X16: Not permitted.
Other cranes: with speed restrictions as follows:
Bridge 15, Sutton, Mich..... 15
Bridge 21, Tecumseh, Mich..... 15

Morenci Branch:

Speed restrictions as follows:
Cranes X13, X14, X15 and X16: Not permitted.
Other cranes:
Bridge 60, Grosvenor, Mich..... 5

Fort Wayne Branch:

Speed restrictions as follows:
Bridge 12, Horton, Mich.....15
Bridge 13, Horton, Mich.....15
Bridge 26, Stoney Point, Mich.....15
Bridge 153, Waterloo, Ind.....15
Bridge 220, Fort Wayne, Ind.
Cranes X13, X14, X15 and X16..... 5
Other cranes..... 15

60 ton Flexi-Van Cars.

Lake Division

Multi-level automobile carrying cars are restricted from operating via the Northeast Wye or the Northwest Wye at Ashtabula.

Toledo Division

Stanley Yard Hump.

Western Division

Note: Restricted at the following locations under joint CRI&P and NYC jurisdiction.
Root Street Yard, Mogg Coal Company.
18th Street Yard, track into warehouse F.
18th Street Yard, track 2.

Engines GP-20, 2000 HP road switchers and GP-30, 2250 HP locomotives, and ALCO Model DL-721, class DRS-12A, GE-U25B, when coupled together, cannot negotiate a No. 6 frog or curvature similar to that in lead of a No. 6 turnout and cannot be operated over the following tracks:

Lake Division

Main Line—BV to BE

Dunkirk, N. Y.
Great Lakes Color Printing Corp.

Brocton, N. Y.
Hunley Mfg. Co.

Erie, Pa.
Erie City Iron Works—Easterly Track under East Avenue
Erie City Iron Works—Tracks leading off Rams Horn
Miller Brothers
All Ruberoid Tracks
Atlantic Refining Company
G. J. Gebhardt Coal Co.—Southerly Track East of Chestnut Street
Schlosser Lumber Company
Griffin Mfg. Company
Atlas Erie
G. J. Gebhardt Coal Co.—West of Chestnut Street
All tracks leading off B.&L.E. Interchange East of Chestnut Street
Erie Forge, Old Plant—Plum Street—Scale Track, Gas House Track

Conneaut, O.
Team Track
Scrap Yard

Ashtabula, O.
Stouffer Chemical Co

Collinwood
Collinwood Shale Brick Co.
All tracks in the North Shop area, including leads to the shop
Wellman Engineering Co.
Euclid Foundry and Machine Equipment Co.
Freight House Track
Seaway Redi Mix & Building Supply Co.

Cleveland
The Properties Co.
The West Steel Casting
Merkel Ave. Team Track
Urbang Realty Co.
Lamson & Sessions Co.
Park Drop Forge Co.
Moritz Steel Co.
Xover to Bishop & Babcock Mfg. Co.
American Radiator & Standard Sanitary Corp.
Crucible Steel Co. of America
Excelsior Supply
American Steel and Wire
Cleveland Stone Co.
Star Elevator Co.
Beverage Distributors Co.
Cleveland Securities Investment Co.
No. 4 South Siding—26th St.
Tracks at Express Agency—26th St.
38th Street Team Track
All Tracks GAR Yard
First Storage Track West of Parcel Post Bldg
Industrial lead to Central Lithograph Co.
National Carbon Co.
Otis Elevator Co.
G. E. Conkey Co.
Yard Track leading off Detroit Ave. Frt. House Track
Case Track Extension
General Motors Corp. West of W. 106th St.
Dairyman's Ohio Farmer
Midland Steel Products
Cleveland Production Co.
Hinde and Dauch Paper Co.
Climax Cleaner Corp.
Glidden Co. No. 2
Bramley Storage Co.

Cleveland—West Park
No. 6 North Siding East of W. 150th St.
Howard M. Cook
Roehl Bros. Pav. & Cons. Co.

Belt Jct.
Pure Carbonic—Div. of Air Reduction

Cleveland—Big Four—Front St. to Canal Road
Tracks 1 to 8 inclusive—West 9th St. Terminal
Track 11—West 9th St. Terminal
The Wm. Edwards Co. No. 1
Front Street Ind. No. 2
West 11th St. Industrial Lead

Cleveland—DK
Werner G. Smith
Cuyahoga Lumber Co.—Buckeye Box Co.
Republic Steel Co. Lead
Smith Facing and Supply

Cleveland—Lower Flats
Montana Flour Mills Co.—All tracks
Center Ave. Realty Co.
Tracks Nos. 7 & 8 Trebing Mfg. Co.
Cut Rate Coal & Coke Co.

Cleveland—Central Flats
Team Track No. 19—Leading out of B.&O. Transfer

Cleveland—Clark Ave.
Cleveland Union Stock Yards—No. 1 Lead

Cleveland Short Line

Cleveland—Orange Ave. Terminal
Auto Loading Track
Railway Warehouse, Inc.
Boarding Car Track—Kingsbury Yard

Cleveland—Quincy Ave.
J. Wentworth Smith, Monroe Co. Inc.

Cleveland—Union Ave.
Allyne-Ryan Co. No. 2 Track
Cleveland Transit System
Team Track at East 87th Street

Cleveland—Marcy
E. F. Hauserman Co.
Benj. Moore Co.

Cleveland—Parma
Celotex Company
Rockport
Deluxe Check Printers

Alliance Branch

Alliance
Standard Oil Co.
Wilson Fuel and Supply Co.
Piney Fork
All tracks to J.C.Co. No. 1 Mine

Valley Branch

Warren, Pa.
Bad Order Set-out Track

Youngstown Branch

Ashtabula Harbor
Track No. 4, Dock No. 6
Ashtabula—West Yard
No. 3 Storage, South of S.&R. Plant
Youngstown
Lyden Oil Co. and Pisa Cut Stone

Oil City Branch

Franklin
Low Mfg. Co.

Toledo Division

Main Line—BE to B

Wauseon
Team Track

Toledo Terminal Branch

Toledo
Joseph Foods Warehouse
Overmeyer Warehouse
Elm Storage
Kent Owens Co.
Baker Bros.
West Toledo Passing Track
Dana Corporation
Toledo Properties
Feeley Box Co.—North Toledo Yard

Old Road Branch

Sturgis
House Track

Fort Wayne Branch

Fort Wayne
Select Seed Co.

Western Division

Elkhart, Ind.
Patrick Plywood
Lap Switch—Base of Hump in Robert R. Young Yard
Garden City Tablet Co.—E&W Branch.
City Roofing & Coal Co.—E&W Branch.
South Bend, Ind
O'Brien Varnish Co.
Malleable Steel Range Co.—MC Connection
Eckler Coal Co. JK to Vandalia Jct.
LaPorte, Ind.
Storage Track—South of Allis-Chalmers Co.
South Wilson Track
Seaway Container and American Rubber Companies
American Home Foods
Gary, Ind.
Gary Lumber Co.—Porter Ivanhoe Branch
Chicago—State Line to 87th St.
Columbia Malt Co.
Storage Track No. 1
Schwill Co.
Chicago-Englewood Yard
Machine Shop Lead
Chicago—60th St. to 33rd St.
All Root St. Yard
Dunn Coal Co.
Mogg Coal Co.
Chicago—33rd St. to La Salle St. Station
Mendelang, Spaulding & Frost
H. J. Heinz Co.
23rd St. Team Track
E. L. Headstorm Co.
Xover between Tracks Nos. 3 and 4 at 18th St.
South Yard Tracks Nos. 3 and 4 at 18th St.
Track No. 1—LaSalle St. Station
Track No. 7—LaSalle St. Station

Joliet Branch

Chicago Hts., Ill.
National Bank track

Kankakee Branch—Including Bradley Branches

Kankakee, Ill.—on Bradley Branch in Bradley, Ill.
Kroehler Mfg. Co.

SPECIAL USE OF TRACKS

Lake Division

Erie: First track south of No. 2 track between CP 89 and CP 85 will be used as yard track for movement of trains in either direction, with permission of train dispatcher. Entering this track on signal indication at CP 89 and CP 85.

Trains or engines must not enter this yard track at intermediate points until permission has been obtained from train dispatcher.

When clear of this yard track at intermediate points, the conductor must so report to train dispatcher.

Youngstown: The southbound running track, first track West of No. 1 track between Valley Street and NYC Jct., may be used in either direction with the permission of signalman at Valley Street, under the supervision of the signalman at RS.

Carson: Yard running track, first track west of Carson yard between CP 4, and a point 12,000 feet south thereof, trains and engines must not enter on or use yard running track without receiving verbal permission from the train dispatcher, or by signal indication.

Cleveland: Trains or engines must not use or occupy the following tracks without permission from train dispatcher:

No. 4 siding between Bulkley Blvd. and Belt Jct.

East wye track between WS Jct. and Rockport.

Trains or engines from Nickel Plate connection located east of Clinton Road will obtain permission from signalman at SL before fouling NYC tracks.

Trains or engines using main track between DK and Clark Ave., will report to signalman at OX, when clear at intermediate point.

Between Clark Ave., and Short Line Jct.

No. 1 lead track between Clark Ave. and SL will be used by trains or engines in either direction, with the permission of train dispatcher and under supervision of signalman at SL.

When clear of No. 1 lead at intermediate point, conductor will report to signalman at SL. Trains or engines must not enter No. 1 lead at intermediate point until permission has been obtained from signalman at SL. Westward trains picking up cars while occupying No. 1 lead must not pass West 130th Street until permission has been given. Eastward trains from Rockport will be notified of any trains working at West 130th Street and will be governed accordingly.

Between DK and Clark Ave.:

The switching lead, first track south of main track, will be used by trains or engines in either direction, with permission of train dispatcher and under supervision of signalman at OX, entering track at DK and Clark Ave. on signal indication. When clear of the switching lead at intermediate point the conductor must so report to signalman at OX.

Trains or engines must not enter switching lead at intermediate point until permission has been obtained from signalman at OX.

Double Track, Lake Front:

Eastward trains or engines must not enter No. 4 extension located between West 3rd St., and seven hundred (700) feet west of East 9th St., from pier lead, GAR yard, transfer tracks of P.R.R. tracks until permission has been obtained from Signalman at DB.

Between Hummel Road and East End Rockport:

Permission to occupy No. 4 Belt Lead between Hummel Road and Brookpark Road will be governed by signal indication at Belt Junction. Eastward trains or engines must not use or occupy No. 4 Belt Lead without permission of the Yardmaster at the East End of Rockport Yard.

Alliance: Trains or engines must not use or occupy yard lead between Braceville and Newton Falls and between Piney Fork and Dillonvale without permission from train dispatcher.

Toledo Division

Sandusky: P. R. R. trains will use Ohio Division main track between a point 400 ft. north of CP 242 and former P. R. R. passenger station.

Sandusky: NYC pier track in Water Street, between Franklin and Hancock streets, will be used jointly by NYC and B&O trains and engines. "Stop" signs are located on either side of the intersections. Trains and engines may proceed in accordance with the position of switches and as the way is known to be clear.

Toledo: All movements over the running track, between Wagon Works Junction and K INT., irrespective of class train, will be under Rule 105. All trains and engines using this track must report into clear at Wagon Works Junction, or obtain permission from train dispatcher or operator, before departing.

White Pigeon Jct.: Trains or engines must not occupy the main track west of White Pigeon Jct. unless authorized by the Michigan Division train dispatcher.

Fort Wayne: NYC track between De Groff St. and P. R. R. main line crossing, and Nickel Plate track between P. R. R., main line crossing, and yard limit at Hugo, will be used jointly, Nickel Plate time table and rules govern. Nickel Plate yard engines use NYC track between De Groff St. and NYC yard, and will be governed by Rule S-93.

The following tracks will not be used without permission of the Transportation Superintendent: Between Fort Wayne Jct. and Bankers and between Pleasant Lake and Waterloo.

Western Division

Between CR and HC:

First track south of No. 2 track will be used as a yard track for movement of trains and engines in either direction, with permission of train dispatcher and under the supervision of signalman at HC, MS or CR entering this track on signal indication at HC, MS or CR.

Trains or engines must not enter this track at intermediate points until authorized by train dispatcher and permission has been obtained from signalman at HC, MS or CR.

Trains or engines, when clear at any intermediate point, will report to signalman at HC, MS or CR.

OVERHEAD CLEARANCES

Employes are warned of **close overhead clearances** at the following locations, and must not go on top of box cars, engines or other high equipment while movements are being made under these signal lines, bridges or structures:

Lake Division

Location	Description	Tracks
Main Line:		
East of Waites Crossing MP 35.6	Overhead bridge No. 198.	All tracks
Westfield	Portage Street, bridge No. 115	All tracks
State Line MP 69.3	Bridge No. 60	All tracks
MP 70.8	Bridge No. 57	All tracks
North East	Overhead crane	Canning Co. track
Erie	East Ave. Signal bridge	All tracks
	West of P&E crossing Signal bridge	All tracks
	Union Iron Works	All tracks.
CP 89	Peninsula Road Bridge	All tracks
CP 103	Route 5 bridge	All tracks
Ashtabula	Car end straightener	Repair yard
Geneva	Crosswalk and steam pipes	Geneva Metal Wheel Co. track
	Overhead door	Fisher Spiegel Co. track
Painesville	Morton Salt Company	North Dock and Scale tracks.
	Valley Branch	
Falconer	Overhead crane	Falconer Plate Glass Co. track
Irvineton	Bridge No. 60.48	Main track
Youngsville	Bridge No. 63.50	Main track
Fieldmore Springs	Bridge No. 88.27	Main track
	Oil City Branch	
Osgood	Bridge No. 109	Main track
	Bridge No. 113	Main track
	Bridge No. 113½	Main track
Hadley	Bridge No. 155	Main track
Oil City	Bridge No. 349	Yard track
	Tunnel	Yard track
	JF&C Branch	
Pecan	Bridge No. 72.14	Main track
Carl-MP 79.7	Tunnel No. 1	Main track
Elmo	Bridge No. 99.13	All tracks
Billings	MP 96.44	Loading tracks
Electra MP 103.8	Tunnel No. 2	Main track
MP 104.5	Tunnel No. 3	Main track
Reidsburg	Bridge No. 112.53	Main track
	Bridge No. 114.47	Main track
	Bridge No. 114.61	All tracks
Limestone	Bridge No. 121.64	Main track
Kingsville	Bridge No. 122.73	Main track
Viaduct MP 125.35	Bridge No. 129.23	Main track
Brookville	P.R.R. Tunnel	Main track
	Sharon Branch	
Sharon	Bridge No. 51	Main track
Sharon to Farrell Yard	Bridge No. 1	Main track
	Youngstown Branch	
Youngstown: 1,700 Feet north of McGuffey Street	Cantilever signal	All tracks
Youngstown	Overhead steam pipes	Kopper Products Co. track
Youngstown	Overhead door	Raymond Concrete Pile track
	Cleveland	
Collinwood	Overhead crane	Colonial Iron Co. track
Collinwood	Overhead door	Midwest Forge Co. track
Collinwood Diesel Terminal		
East and West ends of the locomotive fueling and sanding facilities at Collinwood Diesel Terminal.		
Cleveland	Canopy	Republic Steel Corp., Steel and Wire Division.
Cleveland	Overhead cranes and doors	Bowman Products Co. track
Cleveland	Overhead cranes and doors	Kromex Corporation track
DK	EL bridge	All tracks
Marcy	Tunnels	CSL Nos. 3 and 4 tracks east of Mill Creek
	Alliance Branch	
Alliance	Bridge No. 24.18	Main track
Alliance	Broadway Ave. Tunnel	Main track
Alliance	Oxford Ave. Tunnel	Main track
Bergholz	Tunnel No. 59.85	Main track
Amsterdam	K & P Construction Co.	Side track
Apex	Tunnel No. 68.53	Main track
Piney Fork	Tunnel No. 83.46	Main track
Piney Fork	Tunnel No. 84.11	Main track
Dillonvale	Coal Tipple MP 86.32	Yard lead
	LE&P Branch	
Marcy	Bridge No. 0.58 East 71st St.	No. 1 Main track
Marcy	Bridge No. 1.20 Warner Road	No. 1 Main track
Hathaway	Bridge No. 4.47	Main track
Northfield	Bridge No. 12.08	Main track
Brandywine	Bridge No. 15.35	Main track
Darrowville	Bridge No. 20.67	Main track
Brady Lake	PRR Signal Bridge	All tracks

Toledo Division

Main Line:		
Olmsted Falls	Telephone cable over Falls Greenhouse track.	
West of CP 207	Telegraph Road bridge No. 175	All tracks
East of Amherst	Nickel Plate overhead bridge No. 169½	All tracks
East of Amherst	Highway Jackson Street bridge No. 165	All tracks
West of Amherst	Highway bridge No. 150.	All tracks
East of Vermilion	Highway, High Bridge Road, bridge No. 138.	1, 2.

Sandusky	Signal line	Security Terminal track.
One half mile west of overhead bridge, just west of Danbury	Signal line	All tracks
West of Oak Harbor	Nickel Plate overhead bridge No. 32	1, 2.
Toledo	International Assemblix Corp. siding Bancroft St.	
Toledo	North wye track at Sylvania Avenue.	
Toledo	Passenger yard overhead concourse	1 to 6 incl.
Toledo	Fassett Street bridge	All tracks
Toledo	Oak Street bridge	1 and 2.
Toledo	OC Division bridge	1 and 2.
Toledo	P.R.R. bridge	1 and 2.
Toledo	Miami Street bridge	1 and 2.
Toledo	Maumee River bridge	1 and 2.
Toledo	Summer Street bridge	1 and 2.
Toledo	Maumee Ave. bridge and Nickel Plate track	1 and 2.
Toledo	Field Avenue bridge	1 and 2.
Toledo	Nickel Plate bridge	1 and 2.
Toledo	Anthony Wayne Trail bridge	1 and 2.
Toledo	Curtis Street bridge	and 2.
Toledo	Junction Avenue foot- bridge	1 All tracks.
Toledo	Doehler-Jarvis foot- bridge	All tracks.
Toledo	East Broadway plant of Libbey Owens Ford Glass Co.	Track 8.
Wauseon	Signal line	Team track.
Wauseon	Signal line	Mill track.
Wauseon	Signal line	DT&I wye.
Bryan	Signal line	Holabird track.
	Signal line	Elevator track.
1.1 miles west of Bryan	Overhead bridge No. 7	1 and 2.
3.2 miles west of Bryan	Overhead bridge No. 6	1 and 2.
4.0 miles east of Edgerton	Overhead bridge No. 5½	1 and 2.
Waterloo	Signal line	Elevator track.
Corunna	Overhead bridge No. 5	All tracks.
5.0 miles west of Kendallville	Overhead bridge No. 3	All tracks.
Brimfield	Overhead bridge No. 2	All tracks.
1.0 mile east of Ligonier	Overhead bridge No. 1	All tracks.
Millersburg	Wabash overhead bridge No. 18½	All tracks.
Millersburg	Overhead highway Bridge No. ½	All tracks.
Goshen	Overhead footbridge on Goshen Lateral	All tracks.
Goshen	Various wires	All tracks including Indiana Division.

Norwalk Branch

East of Fremont Ohio	Highway overhead bridge No. 60	Main track.
West of Oberlin	Nickel Plate overhead bridge No. 158½	Main track.

Old Road Branch

Riga	Signal line	Elevator track.
0.5 miles west of Blissfield	Overhead bridge No. 184	Main track.
3.0 miles west of Lenawee Jct.	Overhead bridge No. 171	Main track.
Adrian	Overhead bridge No. 169	All tracks.
Hillsdale	Signal line	Hillsdale Steel Products Co. track.
Coldwater	Signal line	Mill track.
	Signal line	Gas Co. track.
	Signal line	Kraut Co. track.
0.5 miles west of Batavia	Overhead bridge No. 42½	Main track.

Morenci Branch

2.0 miles west of Grosvenor	Bridge No. 60	Main track.

Shipshewana Branch

1.0 mile south of Middlebury	Overhead bridge No. 26½	Main track

Fort Wayne Branch

0.7 miles south of Angola	Overhead bridge No. 113	Main track.

Western Division
Main Line

Elkhart	Wires	Storehouse track
Elkhart	Wires	Calvert Coal Co. track
Elkhart	Wires	Main tracks Middlebury St.
Osceola	Wires	Coal track
Mishawaka	Wires	Michael Baron tracks
Mishawaka	Wires	Clarks Laundry tracks
Mishawaka	Wires	Wheelabrator Corp. track
Mishawaka	Wires	Bendix Aviation Corp. track
Terre Coupee	Trolley wires	CSS&SBRR receiving and delivery track
LaPorte	Wires	Coleman Mfg. Co. track
LaPorte	Wires	South Wye track
LaPorte	Wires	Allis-Chalmers Co. track
LaPorte	Wires	Athletic Shoe Co. track
LaPorte	Wires	Maple City Steel Supply track
LaPorte	Wires	Saw Mill track
LaPorte	Wires	Whirlpool Seger track
LaPorte	Wires	Seaway Container track
Chesterton	Wires	Ameling Coal track
PO	Wires	Wye tracks
Gary	Wires	Main tracks to Gary Shamrock Terminal.
NE	EJ&E bridge 9	4-2-1 and westward siding
HC	Drawbridge 8½	2-1-3
¼ mile west of HC Int. Youngstown Sheet & Tube Co. overhead	Cable	All tracks

Kankakee Branch

Walkerton	Wires	NKP Wye track
Walkerton	Wires	B&O Wye track
Knox	Wires	Elevator tracks
North Judson	Wires	C&O Wye tracks
San Pierre	Wires	Elevator tracks
Momence	Wires	Doyle Packing Co.
Dwight	Wires	Elevator track off south east wye.
Streator	Overhead crane	Timco track
Illinois River	Drawbridge 187.11	Main track
Howe	Highway bridge 188.18	All tracks

Porter Ivanhoe Branch

Willow Creek	Wires	Sand pit spur from main track
Willow Creek	Wires Interlocking	B&O transfer track
East Gary	Wires	Spur from main track
Gary	Wires	Yard tracks
Gary	Wires	Spur from main track
Gary	Wires	At Grant St. spur from main track
Gary	Wires	Near Signal 2571 spur from side track

Joliet Branch

South Gary	Wires	At Georgia St. spur from main track
South Gary	Interlocking Wires	Main track
Liverpool	Interlocking Wires	Main track
Griffith	Interlocking Wires	Main track

LAKE DIVISION

Division Superintendent
E. L. Keller

Transportation Superintendent
A. J. Wayne

Terminal Superintendent
A. B. Cravens

Assistant Transportation Superintendents
E. M. Platz
T. E. Murphy—Labor Relations

Trainmasters
R. L. Campau
W. J. Condon
T. J. Dowling
C. C. Felger
M. Grahovac
J. J. Hoenes
J. W. Meadows
D. J. Weisbarth
G. S. Wieland

Division Road Foreman
H. W. Dixon

Road Foremen
R. J. Baty
F. E. LeFauve

Chief Train Dispatcher
W. F. Cross

Assistant Chief Train Dispatchers
C. R. Bachman
A. G. Black
J. E. Coleman
J. E. Devine
R. W. Geer
E. O. Haas
F. H. McCurdy

Train Dispatchers
L. Albert
W. E. Deeley
R. D. Ferguson
C. J. Gallagher
R. C. Harris
W. A. Hillstrom
J. J. Hoenes, Jr.
T. R. Kosarik
J. A. Luthringer
F. W. Mascaro, Jr.
R. L. Miller
G. R. Morrow
W. J. Nicholson
W. L. Ohlrich
R. P. Rose
V. J. Ruth
A. F. Tiedemann, Jr.
C. J. Weber

Division Engineer
Wm. Baerthlein

Division Engineers of Track
R. O. Beers
J. D. Cossel

Master Mechanic
H. F. Levernosh

TOLEDO DIVISION

Division Superintendent
R. T. Fortin

Transportation Superintendent
G. C. Ellert

Terminal Superintendent
P. J. Burkart

Assistant Transportation Superintendents
E. M. Daly
E. R. McGowin—Labor Relations

Trainmasters
R. C. Cottrell
R. W. Fuller
T. O. Jennings
J. H. Lawrence
E. H. Schnell

Assistant Trainmasters
G. A. Bracht, Jr.
W. S. Carman
D. O. Jones
O. B. McPherson

Road Foremen
D. A. Simmons
R. W. Stonecypher

Chief Train Dispatcher
C. H. Fritz

Assistant Chief Train Dispatchers
G. R. Bowsher
W. N. Clark
R. L. Lowman

Train Dispatchers
J. H. Bense
W. H. Delventhal
R. C. Duncan
D. H. Egan
L. F. Goodeman
S. C. Kantor
H. G. Lander
L. T. Lehaney
H. J. McMahon
A. J. Noble
D. J. Pease
R. R. Root
F. G. Stoltz
B. P. Thompson
L. C. Tucker

Division Engineer
J. G. Pfaller

Division Engineers of Track
W. A. Marx
D. Timony

Master Mechanic
R. L. Hauth

WESTERN DIVISION

Division Superintendent
R. V. Brinkworth

Transportation Superintendent
D. G. Boomer

Terminal Superintendent—Elkhart
J. N. Page

Assistant Transportation Superintendent
L. E. Walsh—Labor Relations

Trainmasters
R. J. Grimes
L. R. Keen
C. F. Larson
K. J. Tomasevich
V. B. Wayne

Assistant Trainmaster
J. E. Whited

Division Road Foreman
C. R. Hoffman

Road Foreman
J. R. Kuntz

Chief Train Dispatcher
J. E. Winterfeldt

Assistant Chief Train Dispatchers
W. D. Cutsinger
E. E. Keck
W. R. Sabin

Train Dispatchers
H. S. Bernatski
W. L. Bremer
B. Cain
J. M. Denyes
F. Hayes
G. P. Kasamis
J. A. Landgraf
J. H. Phelps
R. L. Reoh
M. K. Richmond
B. A. Stack

Division Engineer
J. R. Clark

Division Engineer of Track
R. A. Corbett

Master Mechanic
C. W. Cole

BUFFALO TO CHICAGO—ABS WESTWARD—FIRST CLASS

Continued on Page 31

	Miles from Buffalo	STATIONS Main Line	25 See Notes	27 See Notes	17 See Notes	19 See Notes	341	629	57	201 See Note	59 See Note	355 See Note	625	35 See Note
			Twentieth Century Limited	New England States	The Wolverine	The Wolverine	The Knickerbocker	Erie Lackawanna	Cleveland Limited	Chicago	The Chicagoan	The Michigan	Erie Lackawanna	The Iroquois
			Passenger Daily	Passenger Daily	Passenger Daily Except Sunday	Passenger Sunday Only	Passenger Daily	Passenger Daily Except Sat., Sun. and Holidays	Passenger Daily Except Sunday	Passenger Daily	Passenger Daily	Passenger Daily	Passenger Sat., Sun. Holidays Only	Passenger Daily
		LEAVE	A.M.	A.M.	A.M.	P.M.	A.M.	A.M.	A.M.	A.M.	A.M.	P.M.	A.M.	A.M.
Lake Division		*Buffalo*	*1.30*	*1.35*					*4.50*		*7.53*			*9.15*
	7.95	BV	1.45	1.53					5.08		8.11			9.33
	40.25	Dunkirk												s 10.01
	57.45	Westfield												s 10.21
TCS	86.89	Erie	2.45	2.53					s 6.11		s 9.13			s 10.51
	127.70	Ashtabula	3.17	3.25					s 6.50		9.48			s 11.30
	153.18	Painesville							s 7.15					s 11.52
	174.66	QD	3.59	4.15					7.42		10.29			12.32
	174.66	QD	E 4.07	E 4.23					7.50		10.37			12.40
	180.50	East 26th Street												
	182.26	DB	4.18	4.34										
								A.M.					A.M.	
	182.65	East 34th Street												
	182.99	Broadway						7.46					11.26	
	183.24	East 9th Street					A.M.			A.M.				
	184.24	Clev'nd Union Term.						7.50	8.10		10.57		11.30	1.00
	184.24	Clev'nd Union Term.					3.30			9.00	E 11.24			E 1.30
	185.59	West 25th Street						A.M.	A.M.				A.M.	
	193.91	BE	4.32	4.47			3.52			9.22	11.46			1.52
Toledo Division	206.52	Elyria	4.44	4.59			A.M.			s 9.37	11.58			2.03
	241.57	Sandusky	5.10	5.25						s 10.08	12.25			s 2.30
	254.45	Port Clinton												s 2.43
	285.36	CP 285	5.48	6.03						10.58	1.04			3.13
	288.34	Toledo	5.55	6.10						11.05	1.11			3.20
	288.34	Toledo	E 6.00	E 6.15						E 11.20	E 1.21			E 3.30
TCS	292.05	Nasby	6.07	6.22						11.27	1.28			3.37
	341.92	Bryan	6.45	7.00						12.07	2.07			s 4.17
	367.01	Waterloo		s 7.21										
	379.72	Kendallville	7.16	7.33						s 12.40	2.38			4.47
	411.50	Goshen												
	421.45	B	7.56	8.09						1.24	3.20			5.34
	421.61	Elkhart	6.57	7.10						12.25	2.21			4.35
	421.61	Elkhart	E 7.02	E 7.15						E 12.30	E 2.26			E 4.40
	426.40	WG												
Western Division	435.84	High Street												
	436.70	South Bend	B 7.21	s 7.34						s 12.49	s 2.44			s 5.03
	437.29	Arnold Street												
	463.41	La Porte								s 1.17				s 5.32
TCS	463.80	JD												
	466.55	East Pinola			A.M.	P.M.						P.M.		
	481.08	Chesterton												
	482.18	PO	8.02	8.15	11.52	1.32				1.35	3.25	3.50		6.00
	496.03	Gary	B 8.15	s 8.28	C 12.08	C 1.48								s 6.15
	500.09	NE												
	513.89	JN	8.33	8.50	12.25	2.05				2.00	3.55	4.20		6.40
	515.52	Englewood	D 8.40	D 8.55	D 12.30	D 2.10						D 4.25		
	522.17	*Chicago*	*9.00*	*9.15*	*12.45*	*2.25*				*2.35*	*4.25*	*4.40*		*7.00*
		ARRIVE	A.M.	A.M.	P.M.	P.M.	A.M.	A.M.	A.M.	P.M.	P.M.	P.M.	A.M.	P.M.

Time shown at Buffalo and Chicago for information only.

B—No. 25 will stop on signal at South Bend and Gary to discharge passengers.

C—Nos. 17 and 19 will stop on signal at Gary to discharge passengers from Niles and beyond.

D—Nos. 25, 27, 17 19, and 355 will stop at Englewood to discharge passengers.

E—Nos. 25, 27, 201, 59 and 35 may depart five minutes in advance of schedule if traffic is received.

Continued from Page 30

BUFFALO TO CHICAGO—ABS WESTWARD—FIRST CLASS

Continued on Page 32

	Miles from Buffalo	STATIONS Main Line	217	13 See Notes	3 See Notes	23 See Note	51 See Note	813	357 See Notes	315	327	807	369 See Notes	209 See Notes
			G.T.W. R.R.	Mail and Express	Mail and Express	Mail and Express	Empire State Express	C. & O. R.R.	The Twilight Limited	The Gateway	Night Special	C. & O. R.R.	Motor City Special	Chicago
			Passenger Daily	Daily Except Monday	Daily Ex. Sun. & Mon.	Daily Except Monday	Passenger Daily	Passenger Sunday Only	Passenger Daily	Passenger Daily	Passenger Daily	Passenger Daily Except Monday	Passenger Daily	Passenger Daily
		LEAVE	P.M.	P.M.	A.M.	P.M.	P.M.	P.M.	P.M.	P.M.	P.M.	A.M.	A.M.	P.M.
Lake Division		*Buffalo*	.....	.....	*11.16*	*3.00*	*5.20*	.....	.....	.....	.....	.....	.....	.....
	7.95	BV	.....	.....	11.34	3.18	5.38	.....	.....	.....	.....	.....	.....	.....
	40.25	Dunkirk	.....	.....	.....	s 4.00	s 6.05	.....	.....	.....	.....	.....	.....	.....
	57.45	Westfield	.....	.....	.....	.....	s 6.27	.....	.....	.....	.....	.....	.....	.....
TCS	86.89	Erie	.....	.....	12.34	4.40	s 7.02	.....	.....	.....	.....	.....	.....	.....
	127.70	Ashtabula	.....	.....	1.09	5.25	s 7.55	.....	.....	.....	.....	.....	.....	.....
	153.18	Painesville	.....	.....	.....	.....	.....	.....	.....	.....	.....	.....	.....	.....
	174.66	QD	.....	.....	1.52	6.15	8.47	.....	.....	.....	.....	.....	.....	.....
	174.66	QD	.....	.....	2.00	6.25	8.55	.....	.....	.....	.....	.....	.....	.....
	180.50	East 26th Street	.....	.....	.....	.....	.....	.....	.....	.....	.....	.....	.....	.....
	182.26	DB	.....	.....	.....	.....	.....	.....	.....	.....	.....	.....	.....	.....
	182.65	East 34th Street	.....	.....	.....	.....	.....	.....	.....	.....	.....	.....	.....	.....
	182.99	Broadway	.....	.....	.....	.....	.....	.....	.....	.....	.....	.....	.....	.....
	183.24	East 9th Street	.....	.....	.....	.....	.....	.....	.....	P.M.	P.M.	.....	.....	P.M.
	184.24	Clev'nd Union Term.	.....	.....	2.20	6.45	9.15	.....	.....	.....	.....	.....	.....	.....
	184.24	Clev'nd Union Term.	.....	.....	B 3.00	P.M.	P.M.	.....	.....	10.15	10.45	.....	.....	11.15
	185.59	West 25th Street	.....	.....	.....			.....	.....	.....	.....	.....	.....	.....
	193.91	BE	.....	.....	3.22	.....	.....	.....	.....	10.37	11.07	.....	.....	11.37
Toledo Division	206.52	Elyria	.....	.....	3.34	.....	.....	.....	.....	P.M.	P.M.	.....	.....	11.50
	241.57	Sandusky	.....	.....	4.01	.....	.....	.....	.....	.....	.....	.....	.....	s 12.25
	254.45	Port Clinton	.....	.....	.....	.....	.....	.....	.....	.....	.....	.....	.....	.....
	285.36	CP 285	.....	.....	4.40	.....	.....	.....	.....	.....	.....	.....	.....	1.03
	288.34	Toledo	.....	.....	4.47	.....	.....	.....	.....	.....	.....	.....	.....	1.10
TCS	288.34	Toledo	.....	.....	B 4.54	.....	.....	.....	.....	.....	.....	.....	.....	I 1.40
	292.05	Nasby	.....	.....	5.01	.....	.....	.....	.....	.....	.....	.....	.....	1.47
	341.92	Bryan	.....	.....	5.36	.....	.....	.....	.....	.....	.....	.....	.....	2.27
	367.01	Waterloo	.....	.....	.....	.....	.....	.....	.....	.....	.....	.....	.....	.....
	379.72	Kendallville	.....	.....	6.04	.....	.....	.....	.....	.....	.....	.....	.....	3.01
	411.50	Goshen	.....	.....	.....	.....	.....	.....	.....	.....	.....	.....	.....	.....
	421.45	B	.....	.....	6.43	.....	.....	.....	.....	.....	.....	.....	.....	3.39
	421.61	Elkhart	.....	.....	5.44	.....	.....	.....	.....	.....	.....	.....	.....	2.40
	421.61	Elkhart	P.M.	.....	B 5.49	.....	.....	.....	.....	.....	.....	.....	.....	I 2.50
	426.40	WG	.....	.....	.....	.....	.....	.....	.....	.....	.....	.....	.....	.....
Western Division	435.84	High Street	4.18	.....	.....	.....	.....	.....	.....	.....	.....	.....	.....	.....
	436.70	South Bend	s 4.25	.....	6.04	.....	.....	.....	.....	.....	.....	.....	.....	s 3.25
	437.29	Arnold Street	4.26	.....	.....	.....	.....	.....	.....	.....	.....	.....	.....	.....
	463.41	La Porte	.....	.....	.....	.....	.....	.....	.....	.....	.....	.....	.....	.....
	463.80	JD	P.M.	.....	.....	.....	.....	.....	.....	.....	.....	.....	.....	.....
TCS	466.55	East Pinola	.....	P.M.	.....	.....	.....	P.M.	P.M.	.....	.....	A.M.	A.M.	.....
	481.08	Chesterton	.....	.....	.....	.....	.....	.....	.....	.....	.....	.....	.....	.....
	482.18	PO	.....	5.05	6.52	.....	.....	7.19	8.50	.....	.....	3.02	3.20	4.01
	496.03	Gary	.....	.....	.....	.....	.....	.....	C 9.04	.....	.....	.....	E 3.34	s 4.15
	500.09	NE	.....	.....	.....	.....	.....	7.40	.....	.....	.....	3.22	.....	.....
	513.89	JN	.....	5.45	7.35	.....	.....		9.25	.....	.....		3.55	4.35
	515.52	Englewood	.....	5.50	.....	.....	.....	P.M.	D 9.30	.....	.....	A.M.	G 4.00	H 4.40
	522.17	*Chicago*	.....	.....	*8.00*	.....	.....	.....	*9.45*	.....	.....	.....	*4.15*	*5.00*
		ARRIVE	P.M.	P.M.	P.M. *12th St.*	P.M.	P.M.	P.M.	P.M.	P.M.	P.M.	A.M.	A.M.	A.M.

Time shown at Buffalo and Chicago for information only.

Nos. 13, 3 and 23 will not carry passengers.

Nos. 3 and 23 will not operate Nov. 27, Dec. 26, 1964, Jan. 2 and Feb. 23, 1965.

No. 13 will not operate Nov. 27, Dec. 26 and 27, 1964, Jan. 2 and 3 and Feb 23, 1965.

No. 51 receives mail from mail crane at Brocton, N.Y. daily except Sat., Sun. and Holidays.

B—No. 3 may depart in advance of schedule if traffic is received.

C—No. 357 will stop on signal at Gary to discharge passengers from Niles and beyond.

D—No. 357 will stop at Englewood to discharge passengers, will also discharge U.S. Mail at Englewood daily except Sunday.

E—No. 369 will stop at Gary on signal to discharge passengers from Niles and East. Will also stop at Gary daily except Sunday and Monday to discharge express.

G—No. 369 will stop at Englewood to discharge passengers. Will also discharge U.S. Mail at Englewood daily except Sunday.

H—No. 209 will stop at Englewood to discharge U.S. Mail and passengers.

I—No. 209 may depart five minutes in advance of schedule if traffic is received.

Continued from Page 31

BUFFALO TO CHICAGO—ABS WESTWARD—FIRST CLASS

	Miles from Buffalo	STATIONS Main Line	1005 See Note	15 See Note	205	215	39 See Note	809						
			Nickel Plate	Ohio State Limited	G.T.W. R.R.	G.T.W. R.R.	World's Fair Special	C. & O. R.R.						
			Passenger Daily	Passenger Daily	Passenger Daily	Passenger Daily	Passenger Daily	Passenger Daily Except Sunday						
		LEAVE	A.M.	P.M.	A.M.	A.M.	A.M.	A.M.						
Lake Division		*Buffalo*		*11.12*										
	7.95	BV		11.30										
	40.25	Dunkirk												
	57.45	Westfield												
TCS	86.89	Erie		s 12.32										
	127.70	Ashtabula		1.06										
	153.18	Painesville												
	174.66	QD		1.47										
	174.66	QD		1.55										
	180.50	East 26th Street												
	182.26	DB	A.M.											
	182.65	East 34th Street	12.04											
	182.99	Broadway												
	183.24	East 9th Street												
	184.24	Clev'nd Union Term.	12.15	2.15										
	184.24	Clev'nd Union Term.	12.45	c 3.00										
	185.59	West 25th Street	12.50											
	193.91	BE		3.22										
Toledo Division	206.52	Elyria	A.M.	A.M.										
	241.57	Sandusky												
	254.45	Port Clinton												
	285.36	CP 285												
	288.34	Toledo												
	288.34	Toledo												
TCS	292.05	Nasby												
	341.92	Bryan												
	367.01	Waterloo												
	379.72	Kendallville												
	411.50	Goshen												
	421.45	B												
	421.61	Elkhart												
	421.61	Elkhart			A.M.	A.M.								
	426.40	WG												
Western Division	435.84	High Street			3.35	6.17								
	436.70	South Bend			s 3.55	s 6.22								
	437.29	Arnold Street			3.57	6.23								
	463.41	La Porte												
TCS	463.80	JD			A.M.	A.M.								
	466.55	East Pinola					A.M.	A.M.						
	481.08	Chesterton												
	482.18	PO					7.07	9.47						
	496.03	Gary					D 7.21							
	500.09	NE	A.M.					10.07						
	513.89	JN	7.18				7.40							
	515.52	Englewood	B 7.23					A.M.						
	522.17	*Chicago*	*7.40*				*8.00*							
		ARRIVE	A.M.	A.M.	A.M.	A.M.	A.M.	A.M.						

Time shown at Buffalo and Chicago for information only.

B—**No. 1005 will stop at Englewood to discharge passengers.**

C—No. 15 may depart five minutes in advance of schedule if traffic is received.

D—**No. 39 will stop on signal at Gary to discharge passengers from Detroit and beyond.**

CHICAGO TO BUFFALO—ABS EASTWARD—FIRST CLASS

Continued on Page 34

	Miles from Chicago	STATIONS Main Line	368 Motor City Special Passenger Daily Except Sunday	206 G.T.W. R.R. Passenger Daily	222 See Notes Buffalo Passenger Daily	316 Cleveland Special Passenger Daily	14 See Notes Mail and Express Daily	354 See Notes New York Special Passenger Daily	6 See Notes Fifth Avenue Cleveland Limited Passenger Daily	220 G.T.W. R.R. Passenger Daily	8 See Note The Wolverine Passenger Daily	628 Erie-Lackawanna Passenger Daily Except Sun. & Holidays	630 Erie-Lackawanna Passenger Sunday & Holidays only	312 The South-Western Passenger Daily
		LEAVE	A.M.	A.M.	A.M.	P.M.	A.M.	A.M.	A.M.	A.M.	P.M.	P.M.	P.M.	P.M.
Western Division		*Chicago*	*12.01*	.....	*12.15*	.....	*7.00*	*9.00*	*9.50*	.....	*1.20*	.....	.....	.....
	6.65	Englewood	.....	.....	.....	.....	.....	S 9.14	H 10.04	.....	H 1.34	.....	.....	.....
	8.28	JN	12.20	.....	12.30	.....	7.17	9.18	10.07	.....	1.38	.....	.....	.....
	22.08	NE	.....	.....	.....	.....	.....	.....	.....	.....	.....	.....	.....	.....
	26.14	Gary	S 12.39	.....	B 12.50	.....	.....	G 9.47	s 10.23	.....	.....	.....	.....	.....
	39.99	PO	12.55	.....	1.05	.....	7.44	10.03	10.35	.....	2.13	.....	.....	.....
	41.09	Chesterton	.....	.....	.....	.....	.....	.....	.....	.....	.....	.....	.....	.....
TCS	55.74	East Pinola	A.M.	A.M.	.....	.....	.....	A.M.	.....	A.M.	P.M.	.....	.....	.....
	59.16	JD	.....	.....	.....	.....	.....	.....	.....	.....	.....	.....	.....	.....
	58.76	La Porte	.....	.....	.....	.....	.....	.....	s 11.08	.....	.....	.....	.....	.....
	84.88	Arnold Street	.....	12.28	.....	.....	.....	.....	.....	11.19	.....	.....	.....	.....
	85.47	South Bend	.....	S 12.41	B 2.00	.....	8.19	.....	s 11.35	s 11.25	.....	.....	.....	.....
	86.33	High Street	.....	12.43	.....	.....	.....	.....	.....	11.28	.....	.....	.....	.....
	95.80	WG	.....	.....	.....	.....	.....	.....	.....	.....	.....	.....	.....	.....
	100.56	Elkhart	.....	A.M.	2.20	.....	8.45	.....	11.59	A.M.	.....	.....	.....	.....
	100.56	Elkhart	.....	.....	E 2.35	.....	D 8.50	.....	E 12.05	.....	.....	.....	.....	.....
	100.72	B	.....	.....	3.38	.....	9.53	.....	1.08	.....	.....	.....	.....	.....
Toledo Division	110.67	Goshen	.....	.....	.....	.....	.....	.....	.....	.....	.....	.....	.....	.....
	142.45	Kendallville	.....	.....	B 4.20	.....	10.25	.....	1.43	.....	.....	.....	.....	.....
	155.16	Waterloo	.....	.....	.....	.....	.....	.....	.....	.....	.....	.....	.....	.....
	180.25	Bryan	.....	.....	C 4.55	.....	10.53	.....	2.12	.....	.....	.....	.....	.....
TCS	230.12	Nasby	.....	.....	5.53	.....	11.33	.....	2.53	.....	.....	.....	.....	.....
	233.83	Toledo	.....	.....	6.00	.....	11.40	.....	3.00	.....	.....	.....	.....	.....
	233.83	Toledo	.....	.....	E 6.30	.....	D 11.50	.....	E 3.15	.....	.....	.....	.....	.....
	236.81	CP 285	.....	.....	6.38	.....	11.57	.....	3.22	.....	.....	.....	.....	.....
	267.72	Port Clinton	.....	.....	S 7.08	.....	.....	.....	S 3.52	.....	.....	.....	.....	.....
	280.60	Sandusky	.....	.....	S 7.28	.....	12.35	.....	S 4.08	.....	.....	.....	.....	.....
	315.65	Elyria	.....	.....	S 8.10	P.M.	1.14	.....	S 4.45	.....	.....	.....	.....	P.M.
Lake Division	328.26	BE	.....	.....	8.35	12.38	1.25	.....	5.10	.....	.....	.....	.....	8.23
	339.09	West 25th Street	.....	.....	.....	.....	.....	.....	.....	.....	.....	P.M	P.M.	.....
	340.44	Clev'nd Union Term.	.....	.....	9.00	1.00	1.45	.....	5.30	.....	.....	.....	.....	8.45
	340.44	Clev'nd Union Term.	.....	.....	E 10.15	.....	D 2.25	.....	E 5.55	.....	.....	5.20	6.00	.....
	341.44	East 9th Street	.....	.....	.....	P.M.	.....	.....	.....	.....	.....	.....	.....	P.M.
	341.69	Broadway	.....	.....	.....	.....	.....	.....	.....	.....	.....	5.23	6.03	.....
	339.91	DB	.....	.....	.....	.....	.....	.....	.....	.....	.....	P.M.	P.M.	.....
	341.67	East 26th Street	.....	.....	.....	.....	.....	.....	.....	.....	.....	.....	.....	.....
	342.03	East 34th Street	.....	.....	.....	.....	.....	.....	.....	.....	.....	.....	.....	.....
	347.51	QD	.....	.....	10.35	.....	2.45	.....	6.15	.....	.....	.....	.....	.....
	347.51	QD	.....	.....	10.43	.....	2.53	.....	6.23	.....	.....	.....	.....	.....
	368.99	Painesville	.....	.....	S 11.13	.....	.....	.....	S 6.45	.....	.....	.....	.....	.....
TCS	394.47	Ashtabula	.....	.....	S 11.45	.....	3.33	.....	S 7.20	.....	.....	.....	.....	.....
	435.28	Erie	.....	.....	S 12.35	.....	4.05	.....	S 8.00	.....	.....	.....	.....	.....
	464.72	Westfield	.....	.....	S 1.05	.....	.....	.....	S 8.35	.....	.....	.....	.....	.....
	481.92	Dunkirk	.....	.....	S 1.40	.....	.....	.....	S 8.55	.....	.....	.....	.....	.....
	514.22	BV	.....	.....	2.44	.....	5.19	.....	9.32	.....	.....	.....	.....	.....
	522.17	*Buffalo*	.....	.....	*3.00*	.....	*5.35*	.....	*9.48*	.....	.....	.....	.....	.....
		ARRIVE	A.M.	A.M.	P.M.	P.M.	P.M.	A.M.	P.M.	A.M.	P.M.	P.M.	P.M.	P.M.

Time shown at Chicago and Buffalo for information only.

No. 222 receives mail from mail crane at Madison, O. and Brocton, N.Y. daily except Sun. Mon. and Holidays.

No. 14 will not carry passengers.

B—No. 222 will stop on signal at South Bend and Kendallville to discharge passengers from Chicago and to receive passengers for Toledo and beyond, will also stop at Gary and Kendallville daily except Sunday, Monday and days following Holidays and South Bend daily to handle U.S. Mail.

C—No. 222 will stop on signal at Bryan to receive passengers.

D—No 14 may depart in advance of schedule if traffiic is received.

E—Nos. 222 and 6 may depart five minutes in advance of schedule if traffic is received.

G—No. 354 will stop on signal at Gary to receive passengers for Niles and beyond.

H—Nos. 6 and 8 will stop at Englewood to receive passengers.

Continued from Page 33

CHICAGO TO BUFFALO—ABS EASTWARD—FIRST CLASS

Continued on Page 35

	Miles from Chicago	STATIONS Main Line	16 See Note	28 See Notes	356 See Note	26 See Notes	4 See Notes	808	40 See Note	214	306	90 See Notes	370 See Note	366
			Ohio State Limited	New England States	The Twilight Limited	Twentieth Century Limited	Mail and Express	C. & O. R.R.	World's Fair Special	G.T.W. R.R.	Night Special	The Chicag-oan	Mail and Express	Motor City Special
			Passenger Daily	Passenger Daily	Passenger Daily	Passenger Daily	Daily	Passenger Daily	Passenger Daily	Passenger Daily	Passenger Daily	Passenger Daily	Daily Except Saturday	Passenger Saturday only
		LEAVE	P.M.	P.M.	P.M.	P.M.	P.M.	P.M.	P.M.	P.M.	A.M.	P.M.	P.M.	P.M.
							12th St.							
Western Division		*Chicago*	.....	*4.00*	*4.15*	*4.30*	*6.00*	.....	*8.00*	.....	.....	*9.45*	*10.20*	*10.45*
	6.65	Englewood	.....	B 4.14	D 4.29	B 4.44	.....	P.M.	.....	.....	.....	.....	.....	.....
	8.28	JN	.....	4.17	4.32	4.47	6.14		8.18	.....	.....	10.02	10.37	11.01
	22.08	NE	.....	.....	.....	.....	.....	6.27	.....	.....	.....	.....	.....	.....
	26.14	Gary	.....	C 4.32	D 4.52	E 5.02	.....	.....	G 8.42	.....	.....	s 10.17	.....	s 11.22
	39.99	PO	.....	4.45	5.08	5.15	6.45	6.47	8.58	.....	.....	10.30	11.15	11.38
	41.09	Chesterton	.....	.....		.....	.....			.....	.....	.....		
TCS	55.74	East Pinola	.....	.....	P.M.	.....	.....	P.M.	P.M.	P.M.	.....	.....	P.M.	P.M.
	59.16	JD	.....	.....	.....	.....	.....	.....	.....	.....	.....	.....	.....	.....
	58.76	La Porte	.....	s 5.02	.....	.....	.....	.....	.....	.....	.....	s 10.50	.....	.....
	84.88	Arnold Street	.....	.....	.....	.....	.....	.....	.....	10.11	.....	.....	.....	.....
	85.47	South Bend	.....	s 5.25	.....	E 5.53	.....	.....	.....	s 10.21	.....	s 11.30	.....	.....
	86.33	High Street	.....	.....	.....	.....	.....	.....	.....	10.24	.....	.....	.....	.....
	95.80	WG	.....	.....	.....	.....	.....	.....	.....		.....	.....	.....	.....
	100.56	Elkhart	.....	5.53	.....	6.20	7.50	.....	.....	P.M.	.....	12.05	.....	.....
	100.56	Elkhart	.....	I 5.58	.....	I 6.25	J 8.00	.....	.....	.....	.....	I 12.20	.....	.....
	100.72	B	.....	7.01	.....	7.28	9.03	.....	.....	.....	.....	1.23	.....	.....
Toledo Division	110.67	Goshen	.....	.....	.....	.....	.....	.....	.....	.....	.....	.....	.....	.....
	142.45	Kendallville	.....	7.31	.....	7.58	9.38	.....	.....	.....	.....	1.54	.....	.....
	155.16	Waterloo	.....	s 7.43	.....	.....	.....	.....	.....	.....	.....	.....	.....	.....
	180.25	Bryan	.....	8.03	.....	8.26	10.08	.....	.....	.....	.....	2.27	.....	.....
	230.12	Nasby	.....	8.46	.....	9.03	10.53	.....	.....	.....	.....	3.08	.....	.....
TCS	233.83	Toledo	.....	8.53	.....	9.10	11.00	.....	.....	.....	.....	3.15	.....	.....
	233.83	Toledo	.....	I 8.58	.....	I 9.15	J 11.30	.....	.....	.....	.....	I 3.30	.....	.....
	236.81	CP 285	.....	9.05	.....	9.22	11.38	.....	.....	.....	.....	3.37	.....	.....
	267.72	Port Clinton	.....	.....	.....	.....	.....	.....	.....	.....	.....	4.02	.....	.....
	280.60	Sandusky	.....	9.40	.....	9.59	12.18	.....	.....	.....	.....	s 4.17	.....	.....
	315.65	Elyria	P.M.	10.09	.....	10.26	12.51	.....	.....	.....	A.M.	s 4.50	.....	.....
Lake Division	328.26	BE	8.43	10.25	.....	10.45	1.10	.....	.....	.....	5.08	5.20	.....	.....
	339.09	West 25th Street	.....	.....	.....	.....	.....	.....	.....	.....	.....	.....	.....	.....
	340.44	Clev'nd Union Term.	9.05	10.45	.....	.....	.....	.....	.....	.....	5.30	5.40	.....	.....
	340.44	Clev'nd Union Term.	I 9.40	I 11.03	.....	.....	.....	.....	.....	.....		I 7.00	.....	.....
	341.44	East 9th Street	.....	.....	.....	.....	.....	.....	.....	.....	A.M.	.....	.....	.....
	341.69	Broadway	.....	.....	.....	.....	.....	.....	.....	.....	.....	.....	.....	.....
	339.91	DB	.....	.....	.....	10.59	.....	.....	.....	.....	.....	.....	.....	.....
	341.67	East 26th Street	.....	.....	.....	.....	J {1.40	.....	.....	.....	.....	.....	.....	.....
	342.03	East 34th Street	.....	.....	.....	.....	{3.05	.....	.....	.....	.....	.....	.....	.....
	347.51	QD	10.00	11.23	.....	11.10	3.30	.....	.....	.....	.....	7.20	.....	.....
	347.51	QD	10.08	I 11.31	.....	I 11.18	3.38	.....	.....	.....	.....	7.28	.....	.....
	368.99	Painesville	.....	.....	.....	.....	.....	.....	.....	.....	.....	s 7.50	.....	.....
TCS	394.47	Ashtabula	10.45	12.11	.....	11.58	4.25	.....	.....	.....	.....	s 8.20	.....	.....
	435.28	Erie	11.19	s 12.45	.....	12.30	5.05	.....	.....	.....	.....	s 9.00	.....	.....
	464.72	Westfield	.....	.....	.....	.....	.....	.....	.....	.....	.....	s 9.35	.....	.....
	481.92	Dunkirk	.....	.....	.....	.....	.....	.....	.....	.....	.....	s 10.00	.....	.....
	514.22	BV	12.21	1.54	.....	1.37	6.29	.....	.....	.....	.....	10.34	.....	.....
	522.17	*Buffalo*	*12.37*	*2.10*	.....	*1.52*	*6.45*	.....	.....	.....	.....	*10.50*	.....	.....
		ARRIVE	A.M.	A.M.	P.M.	A.M.	A.M.	P.M.	P.M.	P.M.	A.M.	A.M.	P.M.	P.M.

Time shown at Chicago and Buffalo for information only.

Nos. 4 and 370 will not carry passengers.

No. 90 receives mail from mail crane at Angola, N.Y. daily except Sundays and Holidays.

B—Nos. 28 and 26 will stop at Englewood to receive passengers.

C—No. 28 will stop on signal at Gary to receive passengers for Albany and beyond.

D—No. 356 will stop at Englewood to receive passengers, also at Gary on signal to receive passengers for Niles and beyond.

E—No. 26 will stop at Gary and South Bend on signal to receive passengers for Albany and beyond.

G—No. 40 will stop at Gary for U.S. Mail, daily except Sunday, and daily to receive passengers for Niles and beyond.

I—Nos. 16, 26, 28 and 90 may depart five minutes in advance of schedule if traffic is received.

J—No. 4 may depart in advance of schedule if traffic is received.

Continued from Page 34

CHICAGO TO BUFFALO—ABS EASTWARD—FIRST CLASS

	Miles from Chicago	STATIONS Main Line	810 C. & O. R.R. Passenger Daily Except Saturday	1006 Nickel Plate Passenger Daily
		LEAVE	P.M.	P.M.
Western Division		*Chicago*	.....	*11.30*
	6.65	Englewood	P.M.	s 11.44
	8.28	JN		11.48
	22.08	NE	11.25	
	26.14	Gary	.....	P.M.
	39.99	PO	11.43	
	41.09	Chesterton		
TCS	55.74	East Pinola	P.M.	
	59.16	JD		
	58.76	La Porte		
	84.88	Arnold Street		
	85.47	South Bend		
	86.33	High Street		
	95.80	WG		
	100.56	Elkhart		
	100.56	Elkhart		
	100.72	B		
Toledo Division	110.67	Goshen		
	142.45	Kendallville		
	155.16	Waterloo		
	180.25	Bryan		
TCS	230.12	Nasby		
	233.83	Toledo		
	233.83	Toledo		
	236.81	CP 285		
	267.72	Port Clinton		
	280.60	Sandusky		
	315.65	Elyria		A.M.
Lake Division	328.26	BE		
	339.09	West 25th Street		7.58
	340.44	Clev'nd Union Term.		8.10
	340.44	Clev'nd Union Term.		8.30
	341.44	East 9th Street		
	341.69	Broadway		
	339.91	DB		
	341.67	East 26th Street		
	342.03	East 34th Street		8.35
	347.51	QD		
	347.51	QD		A.M.
	368.99	Painesville		
	394.47	Ashtabula		
TCS	435.28	Erie		
	464.72	Westfield		
	481.92	Dunkirk		
	514.22	BV		
	522.17	*Buffalo*		
		ARRIVE	P.M.	A.M.

Time shown at Chicago and Buffalo for information only.

LAKE DIVISION BRANCHES

Ashtabula to Youngstown

		South-ward	STATIONS	North-ward		
		Miles from Ashtabula		Miles from Youngstown		
		Read Down		Read Up		
	ABS	.....	Ashtabula	58.18		
	TCS	4.50	Carson	53.68		
		14.76	CP 14	43.42		
		26.58	Wick	31.60		
		38.57	Latimer	19.61		
		47.10	Brookfield	11.08		
		50.72	Coalburg	7.46		
		52.32	CP 52	5.86		
		56.32	CP 56	1.86		
		57.61	Valley Street	0.57		
	ABS	58.18	Youngstown	.....		
		Leave		Arrive		

On single track Southward trains are superior to Northward trains of the same class, unless otherwise specified.

Jefferson Jct. to Jefferson

		South-ward	STATIONS	North-ward		
		Miles from Ashtabula		Miles from Jefferson		
		Read Down		Read Up		
.....	.....	5.55	Jefferson Jct	5.32	.....	.....
.....	.....	10.87	Jefferson	.....	.....	.....

On single track Southward trains are superior to Northward trains of the same class, unless otherwise specified.

CP 14 to Oil City

SECOND CLASS

	584	EAST-WARD	STATIONS	WEST WARD	585	
	Daily	Miles from Ashtabula		Miles from P.R.R. Jct.	Daily	
	P.M.	Read Down		Read Up	A.M.	
.....	.....	14.76	CP14	70.75	.....	.....
.....	.....	15.27	Dorset	70.24	.....	.....
.....	.....	22.95	Andover	62.56	.....	.....
.....	.....	28.65	Simons	56.86	.....	.....
.....	.....	34.54	Jamestown	50.97	.....	.....
.....	.....	39.41	Osgood	46.10	.....	.....
.....	.....	39.63	Amasa	45.88	.....	.....
.....	.....	41.39	Salem	44.12	.....	.....
.....	.....	46.87	Hadley	38.64	.....	.....
.....	P.M.	50.13	Clarks Mills	35.38	A.M.	.....
.....		54.76	Branch	30.75		.....
.....	3.30	55.86	Stoneboro	29.65	1.50	.....
.....	.....	57.16	Sandy Lake	28.35	.....	.....
.....	.....	63.39	Raymilton	22.12	.....	.....
.....	4.10	66.95	Polk Jct	18.56	1.10	.....
.....	P.M.	67.53	Polk	17.98	A.M.	.....
.....	.....	76.42	Franklin	9.09	.....	.....
.....	.....	78.10	Eclipse	7.41	.....	.....
.....	.....	81.17	Reno	4.34	.....	.....
.....	.....	84.33	Oil City	1.18	.....	.....
.....	.....	85.51	P. R. R. Jct	.....	.....	.....
	P.M.	Arrive		Leave	A.M.	

On single track, Eastward trains are superior to Westward trains of the same class, unless otherwise specified.

Polk Jct. to Rose

SECOND CLASS

	584	EAST-WARD	STATIONS	WEST-WARD	585	
	Daily	Miles from Ashtabula		Miles from Rose	Daily	
	P.M.	Read Down		Read Up	A.M.	
	4.10	66.95	Polk Jct	61.15	1.10	
	.....	70.65	Pecan	57.45	.....	
	.....	77.40	Belmar	50.70	.....	
	5.00	86.07	Van	42.03	12.01	
	.....	92.87	Elmo	35.73	.....	
	5.30	97.62	Shippenville	30.48	11.30	
	.....	98.88	Knox	29.22	.....	
	.....	104.87	Piney	23.23	.....	
	.....	107.61	RN	20.99	.....	
	.....	108.08	Reidsburg	20.02	.....	
	.....	113.33	Limestone	14.77	.....	
	7.00	119.37	Sutton	8.73	10.00	
	P.M.	119.67	L. E. F&C Jct	8.41	P.M.	
		128.10	Rose	.....		
	P.M.	Arrive		Leave	P.M.	

On single track, Eastward trains are superior to Westward trains of the same class, unless otherwise specified.

CP 52 to Ferrona

	Miles from Doughton Jct.		Miles from Ferrona	
TCS	.....	CP 52	7.81	TCS
	1.30	Hubbard	6.51	
	5.87	Farrell	1.94	
	7.00	Sharon	0.81	
	7.81	Ferrona	.....	

Dunkirk to Titusville

SECOND CLASS

	511	SOUTH-WARD	STATIONS	NORTH-WARD	514
	Mon. Wed. Fri.	Miles from Dunkirk		Miles from Titusville	Mon. Wed. Fri.
	A.M.	Read Down		Read Up	A.M.
	11.00	.....	Dunkirk	90.49	10.30
	.....	0.92	Nickel Plate	89.62	.....
	11.15	3.14	Fredonia	87.35	10.15
	.....	4.56	Laona	85.93	.....
	.....	7.18	Nortons	83.31	.....
	11.45	14.13	Cassadaga	76.36	9.45
	12.01	21.82	Sinclairville	68.67	9.30
	.....	26.50	Gerry	63.39	.....
	.....	32.39	Falconer	58.10	.....
	12.45	32.79	Falconer Jct	57.70	9.05
	1.05	38.30	Frewsburg	52.19	8.45
	.....	44.75	Akeley	45.74	.....
	1.20	46.70	Russell	43.79	8.25
	.....	51.90	North Warren	38.59	.....
	1.45	54.46	Warren	36.03	8.00
	P.M.	57.26	Starbrick	33.23	A.M.
	.....	60.74	Irvineton	29.75	.....
	.....	63.04	Youngsville	27.45	.....
	.....	71.00	Garland	19.49	.....
	.....	76.36	Newton	14.13	.....
	.....	79.58	Grand Valley	10.91	.....
	.....	88.95	Fieldmore Sps	1.54	.....
	.....	90.49	Titusville	.....	.....
	P.M.	Arrive		Leave	A.M.

On single track Northward trains are superior to Southward trains of the same class, unless otherwise specified.

QD to Belt Jct.—ABS

	Miles from QD	STATIONS AND SIDINGS	Miles from Belt Jct.	
	.....	QD	20.29	
	5.22	Quincy Ave	15.07	
	5.90	Buckeye Rd	14.39	
	6.72	Kinsman Rd	13.57	
	7.52	Union Ave	12.77	
	10.04	Marcy	10.25	
	16.80	Parma	3.49	
	17.93	Short Line Jct	2.36	
	19.16	Rockport	1.13	
	20.29	Belt Jct	.....	

Brady to Marcy

	Miles from Brady	STATIONS AND SIDINGS	Miles from Marcy	
	.....	Brady	27.76	
	2.19	Hugo	24.57	
	6.26	Darrowville	21.50	
	9.85	Chittenden	17.91	
	13.53	Brandywine	14.23	
	17.33	Northfield	10.43	
	20.90	Egypt	6.86	
	24.20	Hathaway	3.56	
	26.04	Warner	1.72	
	27.76	Marcy	.....	

On single track, Eastward trains are superior to Westward trains of the same class, unless otherwise specified.

Braceville to Dillonvale

SECOND CLASS

504 Daily Ex. Sat., Sun. & Holidays		SOUTHWARD Miles from Phalanx Read Down	STATIONS	NORTHWARD Miles from Dillonvale Read Up		503 Daily Ex. Sat., Sun. & Holidays
P.M.	.....	.....	*Phalanx*	87.64	.....	A.M.
.....	.....	1.34	Braceville	86.30	.....	
12.01	.....	4.38	Newton Falls	83.26	.....	8.30
.....	.....	11.20	Palmyra	76.44	.....	.....
.....	.....	18.48	North Benton	69.16	.....	.....
.....	.....	24.73	Alliance C.&P. Crossing	62.91	.....	.....
1.05	.....	25.08	Alliance	62.56	.....	7.25
.....	.....	26.57	Mount Union	61.07	.....	.....
.....	.....	32.79	Freeburg	54.85	.....	.....
2.10	.....	41.42	Minerva	46.22	.....	6.20
P.M.	.....	42.11	Minerva Yard	45.53	.....	A.M.
.....	.....	46.09	Augusta	41.55	.....	.....
.....	.....	48.20	Watheys	39.44	.....	.....
.....	.....	52.52	Mechanicstown	35.12	.....	.....
.....	.....	56.00	Wattsville	31.64	.....	.....
.....	.....	60.87	Bergholz	26.77	.....	.....
.....	.....	62.42	Phillips	25.22	.....	.....
.....	.....	63.55	Sheperd's Siding	24.09	.....	.....
.....	.....	65.00	Amsterdam	22.64	.....	.....
.....	.....	68.18	Hays	19.46	.....	.....
.....	.....	69.57	Apex	18.07	.....	.....
.....	.....	73.55	Pan	14.91	.....	.....
.....	.....	76.71	Hopedale	10.93	.....	.....
.....	.....	78.22	Marion Mine	6.84	.....	.....
.....	.....	82.81	Piney Fork	4.83	.....	.....
.....	.....	87.64	Dillonvale	.....	.....	.....
P.M.		Arrive		Leave		A.M.

On single track, Northward trains are superior to Southward trains of the same class, unless otherwise specified.

TOLEDO TERMINAL BRANCH — ABS

EASTWARD AND SOUTHWARD—FIRST-CLASS

	Miles from Detroit	STATIONS	48 C. & O.	40 C. & O.	46	721	381 N. Y. C.					
			57 B. & O.	53 B. & O.	C. & O.	B. & O.	71 B. & O.					
			Passenger Daily	Passenger Daily	Passenger Daily	Passenger Daily	Passenger Saturday Only					
		LEAVE	P. M.	A. M.	P. M.	P. M.	P. M.					
	50.3	Alexis	11.40	11.43	7.06	.....	6.13	.....	.....	.....	.....	.....
	51.4	K	.....	.....	.....	.....	.....	.....	.....	.....	.....	.....
	54.7	Wagon Works Jct.	11.50	11.49	7.13	.....	6.20	.....	.....	.....	.....	.....
	57.8	Swan Creek	.....	.....	.....	.....	.....	.....	.....	.....	.....	.....
	59.0	Toledo	11.59	11.59	7.25	.....	6.30	.....	.....	.....	.....	.....
		ARRIVE										
TCS	Miles from Toledo	LEAVE										
		Toledo	12.40	12.15	7.55	7.40	6.35	.....	.....	.....	.....	.....
	0.7	Maumee River	12.45	12.20	.....	7.45	6.40	.....	.....	.....	.....	.....
	1.2	Fassett St	.....	.....	.....	.....	.....	.....	.....	.....	.....	.....
	1.9	CP286	.....	.....	8.00	.....	.....	.....	.....	.....	.....	.....
	2.6	Rockwell Jct	.....	.....	8.01	.....	.....	.....	.....	.....	.....	.....
	5.3	SA	.....	.....	.....	.....	.....	.....	.....	.....	.....	.....
		ARRIVE	A. M.	P. M.	P. M.	P. M.	P. M.					

WESTWARD AND NORTHWARD—FIRST-CLASS

	Miles from Toledo	STATIONS	58 B. & O.	722 B. & O.	47	54 B. & O.	70 B. & O.					
			49 C. & O.	45 C. & O.	C. & O.	39 C. & O.	384 N. Y. C.					
			Passenger Daily	Passenger Daily	Passenger Daily	Passenger Daily	Passenger Saturday Only					
		LEAVE	A. M.	A.M.	A. M.	P.M.	P. M.					
	5.3	SA	.....	.....	.....	.....	.....	.....	.....	.....	.....	.....
	2.6	Rockwell Jct	.....	.....	9.51	.....	.....	.....	.....	.....	.....	.....
	1.9	CP286	.....	.....	9.58	.....	.....	.....	.....	.....	.....	.....
	1.2	Fassett St	.....	.....	.....	.....	.....	.....	.....	.....	.....	.....
	0.7	Maumee River	5.05	6.23	.....	2.25	2.40	.....	.....	.....	.....	.....
		Toledo	5.10	6.28	10.05	2.30	2.45	.....	.....	.....	.....	.....
		ARRIVE										
TCS	Miles from Toledo	LEAVE										
		Toledo	5.30	6.40	10.15	2.45	2.50	.....	.....	.....	.....	.....
	1.2	Swan Creek	.....	.....	.....	.....	.....	.....	.....	.....	.....	.....
	4.3	Wagon Works Jct.	5.41	6.51	10.26	2.55	3.00	.....	.....	.....	.....	.....
	7.6	K	.....	.....	.....	.....	.....	.....	.....	.....	.....	.....
	8.7	Alexis	5.49	6.59	10.34	3.02	3.07	.....	.....	.....	.....	.....
		ARRIVE	A. M.	A. M.	A. M.	P. M.	P. M.					

TOLEDO DIVISION BRANCHES

Toledo to Hudson

695 Daily Except Sunday Second Class	631 Daily Except Sunday First Class	WEST-WARD Miles from Buffalo	STATIONS	EAST-WARD Miles from Elkhart	632 Daily Except Sunday First Class	694 Daily Except Sunday Second Class
A.M.	.....	296.44	Toledo	142.42	.....	P.M.
.....	.....	297.70	Swan Creek	141.10	.....	3.00
9.15	.....	300.20	Vulcan	138.62	.....	.....
.....	.....	306.60	Sylvania	132.26	.....	.....
.....	.....	311.20	Ottawa Lake	127.64	.....	.....
.....	.....	316.40	Riga	122.43	.....	.....
.....	.....	318.60	Blissfield	120.27	.....	.....
12.10	A.M.	321.20	Grosvenor	117.62	A.M.	12.40
.....	.....	322.90	Palmyra	116.00	.....	.....
12.20	10.20	324.70	Lenawee Jct.	114.18	6.40	12.30
P.M.	.....	328.30	Wabash Crossing	110.59	.....	P.M.
	10.45	328.80	Adrian	110.07	6.30	
.....	A.M.	336.00	Cadmus	102.90	A.M.	.....
.....		339.80	Clayton	99.05		.....
.....	.....	346.30	Hudson	92.61	.....	.....

On single track, Westward trains are superior to Eastward trains of the same class, unless otherwise specified.

Osseo to Elkhart

	693 Daily Except Sunday Second Class	WEST-WARD Miles from Buffalo	STATIONS	EAST-WARD Miles from Elkhart	696 Daily Except Sunday Second Class	
.....	A.M.	356.30	Osseo	82.53	P.M.	.....
.....	7.15	362.10	Hillsdale	76.74	3.00	.....
.....	.....	366.00	Fort Wayne Jct.	72.84	.....	.....
.....	.....	366.60	Jonesville	72.24	.....	.....
.....	.....	371.70	Allen	67.14	.....	.....
.....	8.30	378.20	Quincy	60.63	.....	.....
.....	9.00	384.60	Coldwater	54.24	1.15	.....
.....	.....	389.80	Batavia	49.04	.....	.....
.....	10.00	395.40	Bronson	43.48	12.50	.....
.....	.....	402.10	Burr Oak	36.75	.....	.....
.....	12.15	408.30	Sturgis	30.52	12.15	.....
.....	.....	408.60	RK	30.24	.....	.....
.....	1.30	420.10	White Pigeon	18.78	9.15	.....
.....	P.M.	421.20	White Pigeon Jct.	17.63	A.M.	.....
.....		430.50	Bristol	8.36		.....
.....	.....	438.70	B	.15	.....	.....
.....	.....	438.90	Elkhart	.....	.....	.....

On single track, Eastward trains are superior to Westward trains of the same class, unless otherwise specified.

Elyria Jct. to Millbury Jct.

SECOND CLASS

647 Daily Except Sunday	645 Mon. Wed. Fri.	WEST-WARD Miles from Buffalo	STATIONS	EAST-WARD Miles from Toledo	646 Tue. Thur. Sat.	648 Daily Except Sunday
P.M.	A.M.				P.M.	P.M.
.....	9.30	207.89	Elyria Jct.	86.47	1.30	.....
.....	.....	215.88	Oberlin	78.48	.....	.....
.....	.....	220.52	Kipton	73.84	.....	.....
.....	.....	225.78	Wakeman	68.58	.....	.....
.....	.....	230.46	Collins	63.90	.....	.....
.....	11.30	237.08	Norwalk	57.28	11.30	.....
.....	.....	241.60	Monroeville	52.76	.....	.....
.....	1.30	249.14	Bellevue	45.22	9.30	.....
P.M.	P.M.	256.53	Clyde	37.83	A.M.	P.M.
1.30	.....	264.87	Fremont	29.49	.....	12.30
.....	.....	271.98	Lindsey	22.38	.....	.....
.....	.....	277.23	Elmore	17.11	.....	.....
.....	.....	281.96	Genoa	12.40	.....	.....
3.00	.....	286.75	Millbury Jct.	7.61	.....	9.50
P.M.	P.M.	Arrive		Leave	A.M.	A.M.

On single track Eastward trains are superior to Westward trains of the same class, unless otherwise specified.

Fort Wayne to Waterloo

FIRST CLASS

736 Daily Except Sat.	NORTH-WARD Miles from Ft. Wayne	STATIONS	SOUTH-WARD Miles from Jackson	672 Daily Except Sat.
P.M.				P.M.
5.15	.....	Fort Wayne	96.24	9.15
6.45	20.80	Auburn	75.44	7.50
7.15	25.81	Waterloo	70.43	7.30
P.M.	Arrive		Leave	P.M.

On single track Northward trains are superior to Southward trains of the same class, unless otherwise specified.

Waterloo to Hillsdale

FIRST CLASS

675 Daily Except Sunday	NORTH-WARD Miles from Ft. Wayne	STATIONS	SOUTH-WARD Miles from Jackson	674 Daily Except Sunday
.....	25.81	Waterloo	70.43	.....
.....	32.79	Steubenville	63.45	.....
P.M.	35.78	Pleasant Lake	60.46	P.M.
5.30	40.03	Angola	56.21	5.00
.....	47.38	Fremont	48.86	.....
.....	51.45	Ray	44.79	.....
.....	55.08	Montgomery	41.46	.....
.....	60.45	Reading	35.79	.....
.....	65.15	Bankers	31.09	.....
7.00	69.37	Hillsdale	29.19	3.30
P.M.	Arrive		Leave	P.M.

On single track Southward trains are superior to Northward trains of the same class, unless otherwise specified.

Fort Wayne Jct. to Jackson

FIRST CLASS

677 Daily Except Sunday	NORTH-WARD Miles from Ft. Wayne	STATIONS	SOUTH-WARD Miles from Jackson	676 Daily Except Sunday
A.M.	Leave		Arrive	A.M.
9.30	70.95	Fort Wayne Jct.	25.29	11.40
.....	71.66	Jonesville	24.58	.....
.....	77.41	Mosherville	18.83	.....
10.30	82.20	Hanover	14.04	10.40
.....	85.81	Horton	10.43	.....
A.M.	91.11	Haires	5.13	A.M.
.....	*96.24*	*Jackson*	.....	.....

On single track Northward trains are superior to Southward trains of the same class, unless otherwise specified.

Goshen to Shipshewana

FIRST CLASS

662 Daily Except Sunday	EAST-WARD Miles from Goshen	STATIONS	WEST-WARD Miles from Ship-shewana	663 Daily Except Sunday
A.M.	Leave		Arrive	A.M.
10.01		Goshen	16.41	11.10
10.30	9.24	Middlebury	7.17	10.40
A.M.	16.41	Shipshewana		A.M.

On single track Eastward trains are superior to Westward trains of the same class, unless otherwise specified.

Lenawee Jct. to Ida

	Miles from Lenawee Jct.	STATIONS	Miles from Ida	
.....	.....	Lenawee Jct.....	19.39	.....
.....	8.75	Deerfield.....	10.64	.....
.....	12.23	Petersburg.....	7.16	.....
.....	16.84	Federman.....	2.55	.....
.....	19.39	Ida.....	.....	.....

On single track, Eastward trains are superior to Westward trains of the same class, unless otherwise specified.

Jonesville to Litchfield

	Miles from Jonesville	STATIONS	Miles from Litchfield	
.....	.....	Jonesville.....	6.90	.....
.....	6.90	Litchfield.....	.....	.....

On single track, Eastward trains are superior to Westward trains of the same class, unless otherwise specified.

Grosvenor to Morenci

	Miles from Grosvenor	STATIONS	Miles from Morenci	
.....	.....	Grosvenor.....	18.22	.....
.....	4.59	Ogden.....	13.63	.....
.....	7.98	Jasper.....	10.24	.....
.....	11.64	Weston.....	6.58	.....
.....	18.22	Morenci.....	.....	.....

On single track, Eastward trains are superior to Westward trains of the same class, unless otherwise specified.

Lenawee Jct. to Manchester

FIRST CLASS

632 Daily Except Sunday	Northward Miles from Lenawee Jct.	STATIONS	Southward Miles from Manchester	631 Daily Except Sunday
A.M.				A.M.
6.45	.....	Lenawee Jct.....	21.34	9.20
.....	2.15	Raisin Center.....	19.19	.....
7.15	9.01	Tecumseh.....	12.33	9.01
A.M.				A.M.
.....	13.48	Clinton.....	7.86	.....
.....	21.34	Manchester.....	.....	.....
A.M.				A.M.

On single track, Northward trains are superior to Southward trains of the same class, unless otherwise specified.

Hillsdale to North Adams

FIRST CLASS

682 Daily Except Sunday	EASTWARD Miles from Hillsdale	STATIONS	WESTWARD Miles from North Adams	681 Daily Except Sunday
P.M.				P.M.
3.00	.....	Hillsdale.....	7.50	4.15
3.30	7.50	North Adams.....	.....	3.45
P.M.	Arrive		Leave	P.M.

On single track Eastward trains are superior to Westward trains of the same class, unless otherwise specified.

WESTERN DIVISION BRANCHES

Porter to Ivanhoe—ABS

Westward Miles from Detroit	STATIONS	Eastward Miles from Kensington	
.....	240.69	Porter.....	31.08	.....
.....	246.67	Willow Creek...	25.10	.....
.....	249.87	East Gary.....	21.90	.....
.....	255.14	Gary.....	16.63	.....
.....	256.37	Tolleston.....	15.40	.....
.....	260.50	Ivanhoe.....	11.27	.....

East Gary to Joliet

SECOND CLASS

Westward 701 Daily	Miles from East Gary	STATIONS	Eastward Miles from Joliet	702 Daily
A.M.				A.M.
11.00	.....	East Gary.....	44.37	6.30
.....	2.94	Liverpool.....	41.43	.....
.....	5.38	South Gary....	38.99	.....
.....	7.79	Ross.....	36.58	.....
.....	10.35	Griffith.....	34.02	.....
11.30..	12.17	Hartsdale.....	32.20	6.00
.....	15.43	Dyer.....	28.94	.....
12.01..	21.36	Chicago Heights	23.01	5.30
.....	24.79	Matteson.....	19.58	.....
.....	32.47	Frankfort.....	11.90	.....
.....	37.14	Spencer.....	7.23	.....
.....	38.60	Steele.....	5.77	.....
2.30..	44.37	Joliet.....	.....	2.45
P.M.	Arrive		Leave	A.M.

On single track, Westward trains are superior to Eastward trains of the same class, unless otherwise specified.

Ladd Jct. to Churchill

Eastward Miles from Ladd Jct.	STATIONS	Westward Miles from Churchill	
.....	Ladd Jct.....	2.79	.....
.10	Cherry Branch Jct...	2.69	.....
.34	CMSt.P&P Jct.....	2.45	.....
2.79	Churchill.....	.....	.....

Elkhart to Mishawaka

Westward Miles from Elkhart	STATIONS	Eastward Miles from Mishawaka
.....	Elkhart.....	.....	12.69
9.38	Twin Branch.....	.....	3.31
12.69	Mishawaka.....	.....	.....

Via Jackson, Elkhart Branch.

South Bend to Zearing

SECOND CLASS

WESTWARD					Miles from South Bend	STATIONS	Miles from Zearing	EASTWARD					
791 Daily Ex. Sun.	777 Daily	751 Daily Ex. Sun.	775 Daily					794 Daily	752 Daily Ex. Sun.	776 Daily	792 Daily	742 Daily	
P.M.	P.M.	A.M.	A.M.					P.M.	A.M.	P.M.	P.M.	A.M.	
.....	.....	.....	.....			HF	200.38	.....	.....	.....	.....	.....	
.....	3.00	.....	12.45		2.67	JK	197.71	2.30	.....	.....	.....	3.05	
.....	.....	.....	.....		5.38	Rupel	195.00	.....	.....	.....	.....	.....	
.....	3.10	.....	12.55		9.45	Ginger Hill	190.93	1.45	.....	.....	.....	2.55	
.....	.....	.....	.....		13.57	North Liberty	186.81	.....	.....	.....	.....	.....	
.....	3.30	.....	1.10		19.64	Walkerton	180.74	1.05	.....	.....	.....	2.35	
.....	3.40	.....	1.20		27.64	Hamlet	172.74	12.50	.....	.....	.....	2.25	
.....	.....	.....	.....		33.89	Knox	166.49	.....	.....	.....	.....	.....	
.....	.....	A.M.	.....		38.41	Toto	161.97	.....	A.M.	.....	.....	.....	
.....	4.10	11.30	1.50	742	43.33	North Judson	157.05	12.15	9.30	.....	.....	1.55 1.30	775
.....	.....	.....	.....		49.48	San Pierre	150.90	.....	.....	.....	.....	.....	
.....	.....	.....	.....		53.54	Tefft	146.84	.....	.....	.....	.....	.....	
.....	4.30	12.01	2.10		58.06	Wheatfield	142.32	11.30	8.30	.....	.....	12.50	
.....	.....	.....	.....		63.45	Kersey	136.93	.....	.....	.....	.....	.....	
.....	.....	.....	.....		65.62	DeMotte	134.76	.....	.....	.....	.....	.....	
.....	.....	.....	.....		73.43	Shelby	126.95	.....	.....	.....	.....	.....	
.....	5.00	1.01	2.40		78.58	Schneider	121.08	11.00	8.00	.....	.....	12.20	
.....	.....	.....	.....		82.72	Illinoi	117.66	.....	.....	.....	.....	.....	
.....	.....	.....	.....		86.94	Delmar	113.44	.....	.....	.....	.....	.....	
.....	5.20	1.30	3.00		89.55	MJ	110.83	10.30	7.30	.....	.....	12.05	
.....	.....	.....	.....		90.10	Momence	110.28	.....	.....	.....	.....	.....	
.....	.....	.....	.....		93.22	Eldridge	107.16	.....	.....	.....	.....	.....	
.....	.....	.....	.....		95.80	Exline	104.58	.....	.....	.....	.....	.....	
P.M.	6.00	2.01	4.00		103.50	Kankakee	96.88	10.00	7.00	.....	.....	11.30	
	P.M.	P.M.						A.M.	A.M.	P.M.	P.M.	P.M.	
8.00	.....	.....	5.00		103.50	Kankakee	96.88	.....	.....	12.25	5.00	.....	
.....	.....	.....	.....		104.34	Greenwich	96.04	.....	.....	.....	.....	.....	
.....	.....	.....	.....		106.56	Vans Siding	93.82	.....	.....	.....	.....	.....	
.....	.....	.....	.....		107.13	Kankakee Bank Sand	93.25	.....	.....	.....	.....	.....	
.....	.....	.....	.....		107.82	New Lehigh	92.56	.....	.....	.....	.....	.....	
.....	.....	.....	.....		109.15	Huber	91.23	.....	.....	.....	.....	.....	
.....	.....	.....	.....		111.24	Goodrich	89.14	.....	.....	.....	.....	.....	
.....	.....	.....	.....		115.94	Union Hill	84.44	.....	.....	.....	.....	.....	
8.30	.....	.....	5.30		121.38	Reddick	79.00	.....	.....	11.01	4.15	.....	
.....	.....	.....	.....		124.40	Blair	75.98	.....	.....	.....	.....	.....	
8.40	.....	.....	5.40		130.57	Dwight	69.81	.....	.....	10.45	3.30	.....	
.....	.....	.....	.....		135.83	Sunbury	64.55	.....	.....	.....	.....	.....	
.....	.....	.....	.....		140.69	Budd	59.69	.....	.....	.....	.....	.....	
.....	.....	.....	.....		147.04	Missal	53.34	.....	.....	.....	.....	.....	
.....	.....	.....	.....		150.57	Streator Jct.	49.81	.....	.....	.....	.....	.....	
9.20	.....	.....	6.15		152.38	Streator	48.00	.....	.....	10.01	2.40	.....	
.....	.....	.....	A.M.		162.05	Milla	38.33	.....	.....	A.M.	.....	.....	
9.50	.....	.....	.....		165.80	Lostant	34.58	.....	.....	.....	2.10	.....	
.....	.....	.....	.....		170.00	Priscilla	30.38	.....	.....	.....	.....	.....	
10.10	.....	.....	.....		174.74	McNabb	25.64	.....	.....	.....	1.50	.....	
10.20	.....	.....	.....		180.57	Granville Jct.	19.81	.....	.....	.....	1.40	.....	
.....	.....	.....	.....		180.67	Granville	19.71	.....	.....	.....	.....	.....	
.....	.....	.....	.....		184.85	Moronts	15.53	.....	.....	.....	.....	.....	
10.30	.....	.....	.....		187.36	Illinois River	13.02	.....	.....	.....	1.30	.....	
.....	.....	.....	.....		188.10	Depue Jct.	12.28	.....	.....	.....	.....	.....	
.....	.....	.....	.....		188.28	Howe	12.46	.....	.....	.....	.....	.....	
.....	.....	.....	.....		191.52	Seatonville	9.22	.....	.....	.....	.....	.....	
10.50	.....	.....	.....		192.22	Seatonville Jct.	8.52	.....	.....	.....	1.10	.....	
11.00	.....	.....	.....		193.79	LX	6.95	.....	.....	.....	1.00	.....	
.....	.....	.....	.....		194.31	Ladd Jct.	6.43	.....	.....	.....	.....	.....	
11.05	.....	.....	.....		194.28	*NYC Jct*	6.10	.....	.....	.....	12.55	.....	
11.30	.....	.....	.....		200.38	*Zearing*		.....	.....	.....	12.30	.....	
P.M.	P.M.	P.M.	A.M.		Arrive		Leave	A.M.	A.M.	A.M.	P.M.	P.M.	

On single track, between JK and Kankakee Westward trains are superior to Eastward trains of the same class, unless otherwise specified.
On single track between Kankakee and NYC Jct. Eastward trains are superior to Westward trains of the same class, unless otherwise specified.

Time shown at NYC Jct. and Zearing for information only.

STATIONS, OFFICE CALLS AND OFFICE HOURS

BAY VIEW TO CHICAGO — Via Main Line

STATIONS	Miles from Buffalo	Office Calls	* Train Order Office	* Manual Block Station	* Manual Block Station for Movement Against Current of Traffic	Rule 221
BV.....	8.0	BV				
ATHOL SPRINGS.....	9.2	HA				
HAMBURG ON THE LAKE...CP	10.0	10				
NORTH EVANS.....CP	15.5	15				
ANGOLA EAST.....CP	21.2	21				
ANGOLA.....	21.4	NA				
ANGOLA WEST.....CP	23.0	23				
IRVING.....	27.6	VR				
SILVER CREEK EAST.....CP	30.8	31				
SILVER CREEK.....	31.4	SI				
SILVER CREEK WEST.....CP	32.7	32				
DUNKIRK EAST.....CP	37.0	37				
DUNKIRK.....CP	40.1	39				
DUNKIRK..... Open 8:00 A.M. to 4:00 P.M. daily.	40.3	DO				
CANADAWAY.....CP	40.8	40				
VAN BUREN.....CP	47.2	47				
BROCTON.....	49.3	BX				
BROCTON.....CP	50.0	49				
WESTFIELD.....CP	56.2	56				
WESTFIELD..... Open 7:00 A.M. to 11:00 P.M. daily.	57.5	WB				
GALE STREET.....CP	58.2	58				
RIPLEY EAST.....CP	63.8	63				
RIPLEY.....	65.3	RY				
RIPLEY WEST.....CP	66.0	66				
NORTH EAST.....CP	70.9	70				
NORTH EAST.....	73.0	N				
"N" CROSSOVERS.....CP	73.3	73				
HARBOR CREEK.....CP	79.0	79				
WESLEYVILLE.....	83.0	WV				
PRR CROSSING.....CP ERIE	85.6	85				
ERIE..... Open 7:00 A.M. to 3:00 P.M. daily except Sat. and Sun.	86.9	ERI	*			
DOCK JCT.....CP	89.7	89				
CHAPEL ROAD.....CP	93.0	92				
FAIRVIEW.....CP	97.5	97				
FAIRVIEW.....	97.8	FW				
LAKE CITY.....CP	101.0	100				
LAKE CITY.....	102.2	SX				
GIRARD JCT.....CP	103.6	103				
CONNEAUT.....CP	113.1	113				
CONNEAUT.....	114.5	SK				
AMBOY.....CP	117.0	117				
LOCKWOOD.....CP	124.6	124				
ASHTABULA..... Open 7:30 A.M. to 3:30 P.M. daily	127.7	SD				

BAY VIEW TO CHICAGO — VIA MAIN LINE — Continued

STATIONS	Miles from Buffalo	Office Calls	* Train Order Office	* Manual Block Station	* Manual Block Station for Movement Against Current of Traffic	Rule 221
OD.....INT. Youngstown Branch & PRR Crossing Open day and night	127.9	OD	*			C
"W" CROSSOVERS.....CP	130.3	130				
SAYBROOK.....CP	132.4	132				
MEYERS ROAD.....CP	134.8	134				
GENEVA.....	137.1	SB				
GENEVA.....CP	137.8	137				
UNIONVILLE.....	140.2	DX				
MADISON EAST.....CP	141.2	141				
MADISON.....	142.5	OX				
MADISON WEST.....CP	143.6	143				
PERRY EAST.....CP	145.2	145				
PERRY.....	147.5	KI				
PERRY-WEST.....CP	148.7	148				
PAINESVILLE EAST.....CP	150.8	150				
FOBES STREET.....CP	152.4	152				
PAINESVILLE..... Open 10:30 A.M. to 7:30 P.M. daily	153.2	OQ				
B &O CROSSING.....CP	154.0	154				
PAINESVILLE WEST.....CP	155.8.	155				
MENTOR.....	159.4	OR				
WILLOUGHBY.....CP	162.1	162				
WILLOUGHBY.....	163.7	BY				
WICKLIFFE.....CP	167.0	167				
WICKLIFFE.....	168.3	F				
BR.....INT. Remotely Controlled	171.3	BR				
CWD COLLINWOOD ..... Open 7:30 A.M. to 11:30 P.M. daily	173.8	CWD				
QD.....INT. Open day and night	174.7	QD	*		*	C
EAST 26th STREET	180.5					
DOUBLE TRACK.....	181.8	RN				
DB.....INT Open day and night.	182.3	DB	*		*	C
BELT JCT.....	190.4					
BEREA.....	193.9					
BE.....INT Open day and night.	193.9	BE	*		*	C
OLMSTED FALLS.....	196.6	OF				
OLMSTED FALLS WEST.....CP	197.8	197				
SHAWVILLE.....	202.5					
SHAWVILLE WEST.....CP	202.9	203				
ELYRIA YARD.....	204.6					
ELYRIA.....	206.5	U				
B&O CROSSING.....CP	207.9	207				
AMHERST EAST.....CP	212.7	212				
AMHERST.....	213.2					
FAIRLANE.....	215.9	FAI				
VERMILION EAST.....CP	219.0	219				

STATIONS, OFFICE CALLS AND OFFICE HOURS

BAY VIEW TO CHICAGO — Via Main Line

STATIONS	Miles from Buffalo	Office Calls	* Train Order Office	* Manual Block Station	* Manual Block Station for Movement Against Current of Traffic	Rule 221
VERMILION	220.9					
CEYLON	228.5					
HURON EAST....CP	232.2	232				
HURON	232.3	GK				
HURON WEST....CP	234.4	234				
SANDUSKY EAST....CP B &O Crossing	240.7	240				
SANDUSKY	241.6	RH				
SANDUSKY WEST....CP PRR Crossing	242.8	242				
VENICE....CP	244.8	244				
BAY BRIDGE	247.0					
DB (DRAWBRIDGE) Open day and night.	248.0	DB				
DANBURY....CP	248.5	248				
GYPSUM	251.2	PD				
PORT CLINTON, EAST....CP	253.6	253				
PORT CLINTON	254.5	HO				
PORT CLINTON, WEST....CP	255.9	256				
CO (DRAWBRIDGE) Open 7:00 A.M. to 11:00 P.M.	256.0	CO				
LACARNE	260.2					
OAK HARBOR	265.7	OH				
ROCKY RIDGE....CP	268.3	268				
GRAYTOWN	271.6					
MARTIN	276.1					
CLAY CENTER	277.0					
MILLBURY JCT....CP	280.9	281				
VICKERS....CP Toledo Terminal Crossing	285.4	285				
OAKDALE....CP	286.5	286				
FASSETT ST.	287.1	FS				
MAUMEE RIVER....INT. (DRAWBRIDGE) Open day and night.	287.6	MB				
WABASH....INT. Wabash Crossing Open day and night.	287.9	WS	*			
TOLEDO Open day and night.	288.3	TOL	*			
BROADWAY....CP	288.7	288				
SWAN CREEK....INT. Open day and night.	289.6	SK	*			C
NASBY....INT. Toledo Terminal Crossing Open day and night.	292.1	AV	*			C
HOLLAND EAST....CP	295.3	295				
HOLLAND	297.3					
SWANTON EAST....CP	304.8	304				
SWANTON	306.8	SA				
SWANTON WEST....CP	306.9	307				
DELTA	312.8	DA				
DELTA YARD	315.0					
WABASH WAUSEON....CP Wabash Crossing	317.6	317				

BAY VIEW TO CHICAGO — VIA MAIN LINE — Continued

STATIONS	Miles from Buffalo	Office Calls	Train Order Office	Manual Block Station	Manual Block Station for Movement Against Current of Traffic	Rule 221
WAUSEON	320.5	WN				
D. T. & I. WAUSEON....CP DT &I Crossing	320.5	320				
PETTISVILLE	324.7					
ARCHBOLD EAST....CP	327.0	327				
ARCHBOLD	328.8	DR				
ARCHBOLD WEST....CP	329.8	329				
STRYKER	334.8	SR				
BRYAN EAST....CP	340.3	340				
BRYAN....CP Southern District Crossing	341.4	341				
BRYAN	341.9	RN				
BRYAN WEST....CP	342.5	342				
EDGERTON	352.2	DN				
EDGERTON WEST....CP	352.6	352				
BUTLER EAST....CP Wabash Crossing	358.5	358				
BUTLER	359.1	BY				
WATERLOO	367.0	WO				
WATERLOO....CP	367.0	367				
CORUNNA	373.4					
KENDALLVILLE	379.7	UK				
KENDALLVILLE....CP PRR Crossing	379.7	379				
BRIMFIELD	386.5					
WAWAKA	390.9					
LIGONIER EAST....CP	395.4	395				
LIGONIER	396.3	NI				
LIGONIER WEST....CP	397.7	397				
MILLERSBURG	403.3					
GOSHEN	411.5	N				
GOSHEN WEST....CP	412.4	412				
DUNLAP....CP	415.6	415				
B....INT. Open day and night. Train order signal southwest corner of tower governs movement on Toledo Division Main Line. Train order signal west end of tower governs movement on Northern District and Old Road Branch.	421.5	B	*			xC
ELKHART Open 6:30 A.M. to 7:00 P.M except Saturday, Sunday and Holidays. Open Sat. 6:30 A.M. to 2:30 P.M.	421.6	ELK	*			xC
OAKLAND AVE.... INT. Remotely Controlled	422.2					
21ST STREET....CP	422.5					
BC Open day and night.	424.3	HHH	*			
WG....CP	426.4	WG				
OSCEOLA	427.1	JH				
MISHAWAKA	432.7	AU				
SOUTH BEND Open daily 6:30 A.M. to 11:30 P.M. except Sat. Sun.& Holidays. Open Saturday, Sunday and Holidays 8:00 A.M. to 11:30P.M.	436.7	SBE				

STATIONS, OFFICE CALLS AND OFFICE HOURS

BAY VIEW TO CHICAGO — Via Main Line

STATIONS	Miles from Buffalo	Office Calls	* Train Order Office	* Manual Block Station	* Manual Block Station for Movement Against Current of Traffic	Rule 221
HF.....INT. Northern District Crossing Open day and night.	436.9	HF	*		*	C
LYDICK.....	443.7					
TERRE COUPEE.....	448.4					
NEW CARLISLE.....	450.1	NC				
ROLLING PRAIRIE.....	456.4	RO				
WR.....INT. NKP Crossing Remotely Controlled	462.4	WR				
LAPORTE TICKET..... Open 8:30 A.M. to 11:30 A.M. 12: 30P.M. to 5:30 P.M. except Saturday, Sunday and Holidays.	463.4	AP				
JD.....INT. C &O Crossing Open day and night.	463.8	JD	*		*	C
EAST PINOLA.....INT. Remotely Controlled	466.6					
PINOLA.....	467.5					
OTIS.....INT. Monon Crossing	473.4					
BURDICK.....	476.8					
CHESTERTON..... Open 7:00 A.M. to 3:00 P.M. except Saturday, Sunday and Holidays.	481.1	CA				
PORTER..... Open 6:30 A.M. to 2:30 P.M. 8:00 P.M. to 4:00 A.M.	482.0	WS				
PO.....INT. Northern District Crossing Open day and night.	482.2	PO	*		*	C
DUNE PARK.....	485.7	BE				
FN.....	486.3	FN				
PORTAGE.....	487.3					
MILLERS.....	492.4					
GARY..... Open daily 9:15 A.M. to 5:15 P.M.	496.0	GA				
PINE.....	499.3					
NE.....INT. Open day and night.	500.1	NE	*		*	C
B. & O. CROSSING.....INT. IHB and B &O Crossing Open day and night.	502.7					
INDIANA HARBOR.....	502.8					
HC.....INT. Open day and night.	503.2	HC	*		*	C
WHITING..... Open daily 7:00 A.M. to 4:00 P.M. except Sat., Sun. and Holidays.	505.4	WH				
MS.....INT. Open day and night.	505.7	MS	*		*	C
CR.....INT. Open day and night.	509.5	CR	*		*	C
JN.....INT. Open day and night.	513.9	JN	*		*	C
ENGLEWOOD.....	515.5					
CHICAGO..... Open day and night.	522.2	CHI J	*			

x Refers to Eastward trains only and does not apply to Indiana Division trains.

LAKE DIVISION BRANCHES

ASHTABULA TO YOUNGSTOWN

STATIONS	Miles from Ashta-bula	Office Calls	* Train Order Office	* Manual Block Station	* Manual Block Station for Movement Against Current of Traffic	Rule 221
ASHTABULA HARBOR.....INT. Open day and night.	1.4	JM	*		*	C
ASHTABULA..... Open 7:30 A.M. to 3:30 P.M. daily.		SD				
OD.....INT. NYC Main Line Crossing and PRR Open day and night.	0.2	OD	*		*	C
NICKEL PLATE.....INT. NKP Crossing Open day and night.	1.1	NP	*		*	C
CARSON.....CP	4.5	4				
JEFFERSON JCT.....	5.5					
SOUTH CARSON.....CP	7.7	7				
NORTH DORSET.....CP	12.6	13				
DORSET JCT.....CP	14.8	14				
NORTH WICK.....CP	23.8	24				
WICK.....CP	26.6	26				
GUSTAVUS.....	31.4					
NORTH LATIMER.....CP	36.3	36				
EL CROSSING .....CP LATIMER	38.6	38				
BROOKFIELD.....	47.1					
COALBURG.....	50.7	CU				
DOUGHTON JCT. .....CP	52.4	52				
THORN HILL .....CP	56.3	56				
YOUNGSTOWN.....INT. EL Crossing Valley Street, Open day and night.	57.6	VY	*		*	C
YOUNGSTOWN.....	58.3					
EAST YOUNGSTOWN.....	62.1					

JEFFERSON JCT. TO JEFFERSON

STATIONS	Miles from Ashta-bula	Office Calls	* Train Order Office	* Manual Block Station	* Manual Block Station for Movement Against Current of Traffic	Rule 221
JEFFERSON JCT.....	5.6					
JEFFERSON.....	10.9	BF				

CP 52 TO SHARON

STATIONS	Miles from Dough-ton	Office Calls	* Train Order Office	* Manual Block Station	* Manual Block Station for Movement Against Current of Traffic	Rule 221
DOUGHTON JCT. .....CP	0.0	52				
COALBURG.....	.6	CU				
HUBBARD.....	1.3	HB				
FARRELL..... EL Crossing	5.8	B				
SHARON.....	7.0	NX				
FERRONA.....	7.8	JU				

STATIONS, OFFICE CALLS AND OFFICE HOURS

CP 14 TO OIL CITY

STATIONS	Miles from Ash-tabula	Office Calls	* Train Order Office	* Manual Block Station	* Manual Block Station for Movement Against Current of Traffic	Rule 221
DORSET JCT.....CP	14.8	14				
DORSET.....	15.3					
ANDOVER.....	23.0	VA				
SIMONS.....	28.7	MO				
JAMESTOWN.....INT. PRR Crossing	34.5	JS				
OSGOOD.....	39.4	AJ				
AMASA.....INT. EL Crossing	39.6	AM				
SALEM.....	41.4	SM				
HADLEY.....	46.9	HD				
CLARKS MILLS.....	50.1	CV				
BRANCH.....	54.8	BH				
STONEBORO..... Open day and night.	55.9	SA	*			A
SANDY LAKE.....	57.2					
RAYMILTON.....	63.4	RC				
POLK JCT.....	67.0	JC				
POLK.....	67.5					
PENNA STATE ASYLUM.....	68.3					
FRANKLIN.....	76.4	FI				
ECLIPSE.....	78.1	EC				
RENO.....INT.	81.2	RP				
OIL CITY.....	84.3	OC				

POLK JCT. TO ROSE

STATIONS	Miles from Ash-tabula	Office Calls	* Train Order Office	* Manual Block Station	* Manual Block Station for Movement Against Current of Traffic	Rule 221
POLK JCT.....	67.0	JC				
BELMAR.....	77.4	AR				
EMLENTON.....	80.5					
VAN.....	6.1	VN				
ELMO.....	92.9	CM				
SHIPPENVILLE.....	97.6	SI				
KNOX.....	98.9					
PINEY.....	104.9					
RN.....	107.1	RN				
REIDSBURG.....	108.1					
LIMESTONE.....	113.3	NE				
SUTTON..... Open 6:00 P.M. to 2:00 A.M. daily except Sunday.	119.4	SU	*			C
L. E. F. & C. JUNCTION.....	119.7	FJ				
ROSE..... Open 7:00 A.M. to 3:00 P.M. daily except Saturday and Sunday	128.1	GH	*			C

DUNKIRK TO TITUSVILLE

STATIONS	Miles from Dun-kirk	Office Calls	* Train Order Office	* Manual Block Station	* Manual Block Station for Movement Against Current of Traffic	Rule 221
DUNKIRK..... Open 8:00 A.M. to 4:00 P.M. daily.	0.0	DO	*			A
DUNKIRK, Nickel Plate.....INT. PRR and NKP Crossing Open day and night	0.9					
FREDONIA.....	3.1	FD				
NORTONS.....	7.1					
CASSADAGA.....	14.1	G				
SINCLAIRVILLE.....	21.8	V				
GERRY.....	26.5					
FALCONER.....	32.3	H				
FALCONER JCT.....INT. EL Crossing Open 9:00 A.M. to 1:00 A.M. daily.	32.7	DV	*			A
FREWSBURG.....	38.3	B				
AKELEY.....	44.7					
RUSSELL.....	46.7	R				
NORTH WARREN.....	51.9					
WARREN..... Open 8:00 A.M. to 5:00 P.M. daily except Sunday.	54.4	W	*			A
STARBRICK.....	57.2					
IRVINETON	60.7					
YOUNGSVILLE.....	63.0					
GARLAND.....	71.0	GI				
NEWTON.....	76.3					
GRAND VALLEY.....	79.5					
FIELDMORE SPRINGS.....	88.9					
TITUSVILLE.....	90.4	Z				

QD TO BE VIA C.U.T.

STATIONS	Miles from QD	Office Calls	* Train Order Office	* Manual Block Station	* Manual Block Station for Movement Against Current of Traffic	Rule 221
QD.....INT Open day and night.	0.0	QD	*		*	C
CT.....INT Open day and night.	9.7	CT	*		*	C
CUT OFFICE..... Open day and night.	9.7	CUT	*			
CLARK AVE.....INT Remotely controlled.	12.9	SM				
SHORT LINE JCT.....INT C. S. L. Crossing Open day and night.	17.6	SL	*		*	C
BEREA.....	21.9					
BE.....INT Open day and night.	21.9	BE	*		*	C

STATIONS, OFFICE CALLS AND OFFICE HOURS

DB TO CLARK AVENUE

STATIONS	Miles from Double Track	Office Calls	* Train Order Office	* Manual Block Station	* Manual Block Station for Movement Against Current of Traffic	Rule 221
DB.....INT Open day and night.	.33	DB				
BRIDGE 2.....INT Open day and night.	.93	OX	*			C
DK.....INT CP	1.4	DK				
CLARK AVENUE.....INT Remotely controlled.	3.83	SM				

NEWTON FALLS TO PINEY FORK

STATIONS	Miles from Phalanx	Office Calls	* Train Order Office	* Manual Block Station	* Manual Block Station for Movement Against Current of Traffic	Rule 221
NEWTON FALLS.....	4.4	NF				
PALMYRA.....	11.2	LM				
ALLIANCE P. R. R. C. & P. DIVISION CROSSING..... PRR Main Line Crossing	24.7	HD				
MINERVA YARD..... Open day and night except 7:55 A.M. to 11:55 P.M. Sunday.	42.1	MI	*			A
PHILLIPS..... Open 2:59 P.M. to 11:59 P.M. dailyexceptSaturday andSunday	62.4	JR	*			A
PINEY FORK..... Open 8:00 A.M. to 5:00 P.M. daily except Saturday and Sunday	82.8	RK	*			A

MARCY TO BRADY

STATIONS	Miles from Marcy	Office Calls	* Train Order Office	* Manual Block Station	* Manual Block Station for Movement Against Current of Traffic	Rule 221
MARCY.....INT Open day and night.	0.0	MY	*			C
BRANDYWINE.....	14.2	BY				
HUGO.....	24.6	HU				
BRADY.....INT Open 7:00 A.M. to 4:00 P.M. daily except Monday.	27.8	BA	*			C

QD TO BELT JCT.

STATIONS	Miles from QD	Office Calls	* Train Order Office	* Manual Block Station	* Manual Block Station for Movement Against Current of Traffic	Rule 221
QD.....INT Open day and night.	0.0	QD	*		*	C
BUCKEYE ROAD	5.9	BD				
MARCY.....INT Open day and night.	10.0	MY	*		*	C
PARMA.....INT B &O Crossing Open day and night.	16.8	PA	*		*	C
SHORT LINE JCT.....INT Main Line Crossing Open day and night.	17.9	SL	*		*	C
ROCKPORT.....	19.2					
BELT JCT	20.3					

TOLEDO DIVISION BRANCHES

ELYRIA JCT. TO MILLBURY JCT.

STATIONS	Miles from Buffalo	Office Calls	* Train Order Office	* Manual Block Station	* Manual Block Station for Movement Against Current of Traffic	Rule 221
ELYRIA JCT. .....CP B &O Crossing	207.9	207				
OBERLIN.....	215.9					
KIPTON.....	220.5					
WAKEMAN.....	225.8					
COLLINS.....	230.5					
NORWALK.....	237.1	MC				
MONROEVILLE.....INT. B &O and NKP Crossing	241.6					
BELLEVUE.....INT. NKP and PRR Crossing	249.0					
BELLEVUE.....	249.1	SF				
CLYDE..... Southern District Crossing	256.5					
FREMONT..... NKP Crossing	264.9	JA				
LINDSEY.....	272.0					
ELMORE.....	277.2					
GENOA.....	282.0	OA				
MILLBURY JCT.....CP	286.8	281				

ALEXIS TO SWAN CREEK

STATIONS	Miles from Detroit	Office Calls	* Train Order Office	* Manual Block Station	* Manual Block Station for Movement Against Current of Traffic	Rule 221
ALEXIS.....INT. Ann Arbor Crossing Open day and night.	50.3	N	*		*	C
K.....INT. Toledo Terminal Crossing Remotely Controlled	51.4	K				
CROSSOVER NORTH OF SYLVANIA AVE., WEST TOLEDO	52.5					
OVERLAND YARD.....	53.2					
WAGON WORKS JCT.....	54.7					
DORR ST.....	55.7					
A. & P. SIDING.....	56.1					
DETROIT YARD.....	56.9					
SWAN CREEK.....INT. Open day and night.	57.7	SK	*			C

OAKDALE TO SA STANLEY

	Miles from Toledo	Office Calls	* Train Order Station	* Manual Block Office	* Manual Block Station for Movement Against Current of Traffic	Rule 221
OAKDALE.....CP	1.8	286				
SA.....INT. Toledo Terminal Crossing Open day and night.	5.3	SA	*			C

STATIONS, OFFICE CALLS AND OFFICE HOURS

VULCAN TO HUDSON — OSSEO TO ELKHART

STATIONS	Miles from Buffalo	Office Calls	* Train Order Office	* Manual Block Station	* Manual Block Station for Movement Against Current of Traffic	Rule 221
VULCAN.....INT. Toledo Terminal Crossing Remotely Controlled	300.2					
SYLVANIA.....	306.6	NY				
MICHIGAN ELEVATOR.....	308.8					
OTTAWA LAKE.....	311.2					
RIGA-D.T.&I. CROSSING...INT. DT &I Crossing	315.5					
RIGA.....	316.4					
BLISSFIELD.....	318.6	BN				
GROSVENOR.....	321.2					
PALMYRA.....	322.9					
LENAWEE JCT.....	324.7					
WABASH CROSSING.....INT. Wabash Crossing	328.3					
ADRIAN.....	328.8	AN	*			
D. T. & I. CROSSING..... DT &I Crossing	329.2					
CADMUS.....	336.0					
CLAYTON.....	339.8					
HUDSON.....	346.3	HN				
OSSEO.....	356.3					
HILLSDALE..... Open daily except Sat. and Sun., 7:00 A.M. to 4:00 P.M.	362.1	D	*			
FORT WAYNE JCT.....	366.0					
JONESVILLE.....	366.6					
ALLEN.....	371.7					
QUINCY.....	378.2	CY				
COLDWATER.....	384.6	C				
BATAVIA.....	389.8					
BRONSON.....	395.4					
BURR OAK.....	402.1					
STURGIS.....	408.3	RS				
RK.....INT. PRR Crossing Open daily 9:00 A.M. to 5:00 P.M.	408.6	RK	*			C
WHITE PIGEON.....	420.1	GN				
WHITE PIGEON JCT..... Northern District	*421.2*					
BRISTOL..... Northern District	*430.5*	*KS*				
B.....INT. Open day and night. Train order signal southwest corner of tower governs movement on Toledo Division Main Line. Train order signal west end of tower governs movement on Northern District and Old Road Branch.	438.7	B	*			C
ELKHART..... Open daily6:30 A.M. to 7:00P.M. except Sat. Sun. and Holidays. Open Sat. 6:30 A.M. to 2:30 P.M.	438.9	RT				

FORT WAYNE TO JACKSON

STATIONS	Miles from Ft. Wayne	Office Calls	* Train Order Office	* Manual Block Station	* Manual Block Station for Movement Against Current of Traffic	Rule 221
FORT WAYNE..... Open daily except Sat. and Sun., 8:00 A.M. to 5:00 P.M.	0.0	FW	*			
AUBURN JCT.....INT. B &O Crossing	19.6					

FORT WAYNE TO JACKSON—Continued

STATIONS	Miles from Fort Wayne	Office Calls	* Train Order Office	* Manual Block Station	* Manual Block Station for Movement Against Current of Traffic	Rule 221
AUBURN.....	20.8	GA				
WATERLOO.....	25.8	WO				
STEUBENVILLE.....INT. Wabash Crossing	32.8					
PLEASANT LAKE.....	35.8					
ANGOLA.....	40.0	RM				
FREMONT.....	47.4	DW				
RAY.....	51.5					
MONTGOMERY.....	55.1	US				
READING.....	60.5					
BANKERS.....	65.2					
HILLSDALE..... Open daily except Sat. and Sun. 7:00 A.M. to 4:00 P.M.	69.4	D	*			
FORT WAYNE JCT.....	71.0					
JONESVILLE.....	71.7					
MOSHERVILLE.....	77.4					
HANOVER.....	82.2					
HORTON.....	85.8					
HAIRES.....	91.1					
XN..... Open daily day and night.	96.2	XN	*			

JONESVILLE TO LITCHFIELD

STATIONS	Miles from Jonesville	Office Calls	* Train Order Office	* Manual Block Station	* Manual Block Station for Movement Against Current of Traffic	Rule 221
JONESVILLE.....	0.0					
LITCHFIELD.....	6.9	FE				

HILLSDALE TO NORTH ADAMS

STATIONS	Miles from Hillsdale	Office Calls	* Train Order Office	* Manual Block Station	* Manual Block Station for Movement Against Current of Traffic	Rule 221
HILLSDALE..... Open daily except Sat. and Sun. 7:00 A.M. to 4:00 P.M.	0.0	D	*			
NORTH ADAMS.....	7.5	.....	.....	.....	.....	.....

LENAWEE JCT. TO MANCHESTER

STATIONS	Miles from Lenawee Jct.	Office Calls	* Train Order Office	* Manual Block Station	* Manual Block Station for Movement Against Current of Traffic	Rule 221
LENAWEE JCT.....	0.0					
RAISIN CENTER.....INT. Wabash Crossing	2.2					
TECUMSEH.....	9.0	SU				
CLINTON.....	13.5	CK				
MANCHESTER.....	21.3	UD				

STATIONS, OFFICE CALLS AND OFFICE HOURS

GROSVENOR TO MORENCI

STATIONS	Miles from Grosvenor	Office Calls	* Train Order Office	* Manual Block Station	* Manual Block Station for Movement Against Current of Traffic	Rule 221
GROSVENOR	0.0					
OGDEN	4.6					
JASPER	8.0	J				
WESTON	11.6					
BIMO DT &I Crossing	14.5					
MORENCI	18.2	MG				

GOSHEN TO SHIPSHEWANA

STATIONS	Miles from Goshen	Office Calls	* Train Order Office	* Manual Block Station	* Manual Block Station for Movement Against Current of Traffic	Rule 221
GOSHEN Open daily except Sat. and Sun. 8:00 A.M. to 5:00 P.M.	0.0.	N	*			
MIDDLEBURY	9.2	MY				
SHIPSHEWANA	16.4	MX				

LENAWEE JCT. TO IDA

STATIONS	Miles from Lenawee Jct.	Office Calls	* Train Order Office	* Manual Block Station	* Manual Block Station for Movement Against Current of Traffic	Rule 221
LENAWEE JCT.	0.0					
DEERFIELD	8.8	HG				
PETERSBURG	12.2					
D. T. & I. CROSSING DT &I Crossing	14.1					
FEDERMAN.....INT. Ann Arbor Crossing	16.8					
IDA	19.4	DY				

WESTERN DIVISION BRANCHES

SOUTH BEND TO LADD

STATIONS	Miles from South Bend	Office Calls	* Train Order Office	* Manual Block Station	* Manual Block Station for Movement Against Current of Traffic	Rule 221
SOUTH BEND.....INT. Open day and night.	0.0	HF	*			xC
OLIVERS	1.1	SR				
JK.....INT. NJI &I Crossing Open day and night.	2.7	JK	*			xC
RUPEL	5.4					
GINGER HILL	9.5	GH				
NORTH LIBERTY	13.6					
NORTH LIBERTY.....INT. Wabash Crossing	13.8					
KN.....INT. B &O and NKP Crossing Open day and night.	19.6	KN	*			C

x—Refers to Eastward trains only.

SOUTH BEND TO LADD—Continued

STATIONS	Miles from South Bend	Office Calls	Train Order Office	Manual Block Station	Manual Block Station for Movement Against Current of Traffic	Rule 221
HA.....INT. PRR Crossing Open day and night.	27.6	HA	*			C
KNOX	33.9					
KNOX.....INT. Nickel Plate Crossing.	33.9					
TOTO	38.4					
NORTH JUDSON Open daily 8:00 A.M. to 4:00 P.M. and 11:00PM to 7:00 A.M.	43.3	J	*			A
NORTH JUDSON.....INT. PRR, EL and C &O Crossing	43.4					
SAN PIERRE.....INT. Monon Crossing	49.5	JR				
TEFFT	53.5					
WHEATFIELD	58.1	WH				
KERSEY	63.5					
DeMOTTE	65.6	FA				
SHELBY.....INT. Monon Crossing	73.4	BY				
SCHNEIDER.....INT. Southern District Crossing Open day and night.	78.6	SG	*			C
ILLINOI	82.7					
DELMAR.....INT. CMStP &P Crossing	86.9	DA				
MJ.....INT. C &EI Crossing Open day and night.	89.6	MJ	*			C
MOMENCE	90.1					
EXLINE	95.8					
KANKAKEE.....INT. I. C. R. R. Crossing	101.0					
WEST KANKAKEE Open day and night.	103.5	K	*			
GREENWICH	104.3					
VANS SIDING	106.5					
LEHIGH	107.8					
HUBER	109.1					
GOODRICH	111.2					
UNION HILL	115.9	UN				
RA.....INT. Wabash Crossing Open day and night.	121.1	RA	*			C
REDDICK	121.4					
BLAIR	124.4					
DWIGHT.....INT. GM&O Crossing	130.1					
DWIGHT	130.6	DG				
SUNBURY	135.8					
BUDD	140.7					
MISSAL	147.0					
G.M.&O Crossing.....INT.	149.9					
STREATOR JCT	150.6					
STREATOR.....INT. ATSF, C. B. & Q. R. R. and G. M. & O. R. R. Crossing Open daily 7:00 A.M. to 3:00 P.M.	152.4	SA	*			A

STATIONS, OFFICE CALLS AND OFFICE HOURS

SOUTH BEND TO LADD—Continued

STATIONS	Miles from South Bend	Office Calls	Train Order Office	Manual Block Station	Manual Block Station for Movement Against Current of Traffic	Rule 221
MILLA	162.1					
LOSTANT.....INT. ICRR Crossing	165.7					
PRISCILLA	170.0					
McNABB	174.7	MC				
GRANVILLE JCT	180.6					
GRANVILLE	180.7	GV				
MORONTS	184.9					
ILLINOIS RIVER.....INT. Open day and night.	187.4	IR	*			C
DEPUE JCT	188.1					
DEPUE	189.3	D				
HOWE	188.3					
SEATONVILLE	191.5					
SEATONVILLE JCT	192.2					
LX	193.8					
LADD JCT Open daily 9:00 A.M. to 6:00 P.M.	194.3	JC				
N. Y. C. JCT	194.3					

EAST GARY TO JOLIET

STATIONS	Miles from East Gary	Office Calls	Train Order Office	Manual Block Station	Manual Block Station for Movement Against Current of Traffic	Rule 221
EAST GARY	0.0	AK				
LIVERPOOL.....INT. PRR Crossing	2.9					
SOUTH GARY.....INT. NKP Crossing	5.4	JO				
ROSS	7.8					
GRIFFITH.....INT. EL, C&O, GTW and EJ&E Crossing	10.4	FH				

EAST GARY TO JOLIET—Continued

STATIONS	Miles from East Gary	Office Calls	Train Order Office	Manual Block Station	Manual Block Station for Movement Against Current of Traffic	Rule 221
HARTSDALE.....INT. PRR Crossing Open daily 8:00A.M.to 4:00 P.M. and 8:00 P.M. to 4:00 A.M.	12.2	HD	*			A
DYER.....INT. Monon Crossing	15.4					
CHICAGO HEIGHTS.....INT. C &EI Crossing	21.4	MC				
MATTESON	24.8	MS				
FRANKFORT	32.5	RF				
SPENCER (NEW LENOX)	37.1					
STEELE	38.6	SR				
JOLIET EJ &E and RI Crossing	44.4	CK	*			

PORTER TO IVANHOE

STATIONS	Miles from Detroit	Office Calls	Train Order Office	Manual Block Station	Manual Block Station for Movement Against Current of Traffic	Rule 221
PORTER.....INT. Main Line Crossing Open day and night.	240.7	PO	*		*	C
WILLOW CREEK.....INT. B &O and Wabash Crossing Open day and night.	246.7	WC	*		*	C
EAST GARY	249.9	AK				
GARY	255.1	GR				
TOLLESTON.....INT. PRR Crossing Open day and night.	256.4	JI	*		*	C
IVANHOE.....INT. EJ &E Crossing Open day and night.	260.5	IH	*		*	C

SYMBOL FREIGHT TRAIN SCHEDULES — WESTWARD

	LS-5	GIB.LS-1	LS-11	LS-21	IHB-1	PC-1	BF-3	NC-1	BC-3	ADV. BF-3
	A.M.	A.M.	A.M.	A.M.	A.M.	A.M.	A.M.	A.M.	A.M.	A.M.
BV	2.20						6.20	6.42	8.50	
Gateway						5.00				
BR	9.00					10.00	12.01	10.45	1.40	
Collinwood	9.15					10.15	12.15	11.00	1.55	
Collinwood	7.00P.					10.45	2.00	11.45	1.57	9.00
Rockport	7.45					11.30				9.45
Rockport	8.30					12.15				10.45
BE	8.45					12.30	3.00	12.40	2.55	11.00
Elyria										
Fairlane									3.45	
Fairlane									4.30	
Air Line Jct	12.01					3.30		3.40	6.28	
Air Line Jct	12.45					3.32		3.42	6.30	
Alexis	1.30									
B (EST)						6.45		7.00	9.30	
Elkhart (CST)						6.00		6.15	8.45	
Elkhart		2.45	4.00	5.00	6.00					
Ivanhoe		5.00	6.15		9.45					
Gibson					10.00					
Blue Island		5.30	6.45							
Blue Island		5.32	6.47							
Englewood				8.00						
Englewood										
Kankakee										
Kankakee										
Streator										
Bensenville-MILW		10.00								
Proviso-CNW			9.30							
Cicero-CBQ										
Norpaul										
Ashl'd Ave. CR & I.										
	A.M.	A.M.	A.M.	A.M.	A.M.	P.M.	P.M.	P.M.	P.M.	A.M.

SYMBOL FREIGHT TRAIN SCHEDULES — WESTWARD

	NT-1	SV-5	BF-1	SV-1	EWDDC-7	NP-7	LS-1	KKKDC-7	NT-5	LS-3
	A.M.	A.M.	A.M.	A.M.	P.M.	P.M.	P.M.	P.M.	P.M.	P.M.
BV		11.15	11.32	11.40			2.05			
Gateway										
BR		2.00	3.45	2.25			5.35			
Collinwood		2.10	4.00	2.35			5.50			
Collinwood		2.55	4.30	3.05			6.20			
Rockport										
Rockport										
BE		3.35	5.15	3.45			7.20			
Fairlane										
Fairlane										
Air Line Jct				5.35			9.30			
Air Line Jct	10.00			5.37			9.32		7.30	
Alexis										
B (EST)	4.45			7.55	12.30		1.10		10.30	11.10
Elkhart (CST)	4.00			7.05	11.45		12.25		9.45	10.25
Elkhart				7.20	6.00	12.01	12.55	5.00		12.45
Ivanhoe						4.00				
Blue Island						5.00				
Blue Island						5.02				
Englewood				9.30	10.00		4.00			
Englewood				10.00						
Kankakee								10.30		4.45
Kankakee										5.30
Streator										8.15
Bensenville-MILW										
Proviso-CNW										
Cicero-CBQ							6.00			
Argo						6.30				
Broadview						8.15				
Norpaul						9.30				
Ashl'd Ave. CR & I.				11.00						
	P.M.	P.M.	P.M.	P.M.	P.M.	P.M.	A.M.	P.M.	P.M.	A.M.

Time shown for information only not conferring timetable superiority.

SYMBOL FREIGHT TRAIN SCHEDULES — EASTWARD

	SV-2	ML-12	SV-6	CB-12	CC-8	CB-2	NY-2	JS-2		
	A.M.	A.M.	A.M.	A.M.	A.M.	A.M.	A.M.	A.M.		
Blue Island	.....	.....	.....	.....	.....	8.30	11.00	.....	.....	.....
Englewood	12.30	.....	.....	6.30	.....	.....	.....	11.00	.....	.....
Gibson	.....	.....	.....	.....	.....	.....	.....	.....	.....	.....
Ivanhoe	.....	.....	.....	.....	.....	9.00	11.30	1.00	.....	.....
Elkhart	2.15	.....	.....	10.00	.....	12.45	1.30	4.00	.....	.....
Elkhart (CST)	2.17	.....	.....	.....	.....	4.45	1.50	.....	.....	.....
B (EST)	3.30	.....	.....	.....	.....	6.05	3.05	.....	.....	.....
Alexis	.....	2.00	.....	.....	.....	.....	.....	.....	.....	.....
Air Line Jct	5.35	2.30	.....	.....	.....	9.30	5.45	.....	.....	.....
Air Line Jct	5.37	2.32	.....	.....	.....	11.00	6.00	.....	.....	.....
Elyria	.....	.....	.....	.....	.....	.....	.....	.....	.....	.....
Elyria	.....	.....	.....	.....	.....	.....	.....	.....	.....	.....
BE	7.30	5.15	7.30	.....	8.00	2.30	8.15	.....	.....	.....
Rockport	.....	.....	.....	.....	8.15	2.45	.....	.....	.....	.....
Rockport	.....	.....	.....	.....	9.15	3.30	.....	.....	.....	.....
Gateway	.....	.....	.....	.....	.....	.....	.....	.....	.....	.....
Collinwood	8.05	5.50	8.05	.....	10.15	4.25	9.00	.....	.....	.....
Collinwood	8.30	6.30	8.25	.....	.....	5.45	9.40	.....	.....	.....
BR	8.45	6.45	8.40	.....	.....	6.00	9.55	.....	.....	.....
BV	12.30	10.00	11.40	.....	.....	10.45	1.45	.....	.....	.....
.....	P.M.	A.M.	A.M.	A.M.	A.M.	A.M.	A.M.	P.M.		

SYMBOL FREIGHT TRAIN SCHEDULES — EASTWARD

	CD-6	NY-6	CDB-4	CD-4	CB-4	EK-2	NY-4	BF-2		
	P.M.	P.M.	P.M.	P.M.	P.M.	P.M.	P.M.	P.M.		
Blue Island	.....	.....	.....	.....	9.30	.....	11.00	.....	.....	.....
Englewood	.....	.....	.....	.....	.....	.....	.....	.....	.....	.....
Gibson	.....	.....	.....	.....	.....	.....	.....	.....	.....	.....
Ivanhoe	.....	.....	.....	.....	10.00	.....	11.30	.....	.....	.....
Elkhart	.....	.....	.....	.....	1.30	.....	1.30	.....	.....	.....
Elkhart (CST)	.....	.....	7.30	7.40	6.30	10.00	1.45	.....	.....	.....
B (EST)	.....	.....	8.50	8.00	7.50	11.15	2.55	.....	.....	.....
Alexis	.....	.....	.....	.....	.....	.....	.....	.....	.....	.....
Air Line Jct	.....	.....	2.00	.....	10.50	.....	5.40	.....	.....	.....
Air Line Jct	.....	.....	7.30	.....	11.50	.....	5.55	.....	.....	.....
Elyria	.....	.....	9.00	.....	.....	.....	.....	.....	.....	.....
Elyria	.....	.....	10.00	.....	.....	.....	.....	.....	.....	.....
BE	6.00	7.15	10.45	.....	2.05	.....	8.00	11.30	.....	.....
Rockport	6.15	.....	.....	.....	2.20	.....	.....	11.45	.....	.....
Rockport	6.45	.....	.....	.....	3.05	.....	.....	12.45	.....	.....
Collinwood	7.30	8.00	11.30	.....	4.00	.....	8.45	1.45	.....	.....
Collinwood	9.00	8.45	3.45	.....	6.30	.....	9.35	.....	.....	.....
BR	9.15	9.00	4.00	.....	6.45	.....	9.50	.....	.....	.....
Gateway	.....	.....	8.00	.....	.....	.....	.....	.....	.....	.....
BV	1.30	12.45	.....	.....	11.30	.....	1.30	.....	.....	.....
.....	A.M.	A.M.	P.M.	P.M.	P.M.	P.M.	P.M.	A.M.		

Time shown for information only not conferring timetable superiority.

TOLEDO TERMINAL BRANCH

SYMBOL FREIGHT TRAIN SCHEDULES — NORTHWARD

	LS-5	SLD-2	TB-10	MC-2	NT-5	MC-8	TL-2			
	A.M.	A.M.	P.M.	P.M.	P.M.	P.M.	P.M.			
Stanley Yard	.....	11.30	.....	6.00	6.01	.....	.....	.....	.....	.....
Stanley Yard	.....	11.32	1.30	6.02	6.03	7.00	10.30	.....	.....	.....
Air Line Jct	12.01	.....	.....	.....	7.00	.....	.....	.....	.....	.....
Air Line Jct	12.45	.....	.....	.....	.....	.....	.....	.....	.....	.....
Alexis	1.30	12.30	3.00	7.00	.....	8.30	11.30	.....	.....	.....
	A.M.	P.M.	P.M.	P.M.	P.M.	P.M.	P.M.			

SYMBOL FREIGHT TRAIN SCHEDULES — SOUTHWARD

	JT-3	CN-2	BF-7	DSL-1	DC-6	DB-4				
	A.M.	A.M.	A.M.	A.M.	P.M.	P.M.				
Alexis	3.30	.....	7.45	11.15	4.01	9.00	.....	.....	.....	.....
Air Line Jct	4.00	.....	.....	.....	4.30	10.00	.....	.....	.....	.....
Air Line Jct	4.30	7.15	.....	.....	5.00	.....	.....	.....	.....	.....
Stanley Yard	5.30	7.58	8.45	12.15	6.00	.....	.....	.....	.....	.....
Stanley Yard	.....	8.00	8.47	12.17	.....	.....	.....	.....	.....	.....
	A.M.	A.M.	A.M.	P.M.	P.M.	P.M.				

LAKE DIVISION — YOUNGSTOWN BRANCH

NORTHWARD AND EASTWARD

	PS10						
	A.M.						
Youngstown	11.00	.....	.....	.....	.....	.....	.....
Ashtabula	2.15	.....	.....	.....	.....	.....	.....
BV	8.00	.....	.....	.....	.....	.....	.....
	P.M.						

WESTWARD AND SOUTHWARD

	BP1	GP1					
	A.M.	P.M.					
BV	9.00	1.45	.....	.....	.....	.....	.....
Ashtabula	12.30	5.10	.....	.....	.....	.....	.....
Youngstown	6.00	9.00	.....	.....	.....	.....	.....
	P.M.	P.M.					

Time shown for information only. Not conferring Time Table superiority.

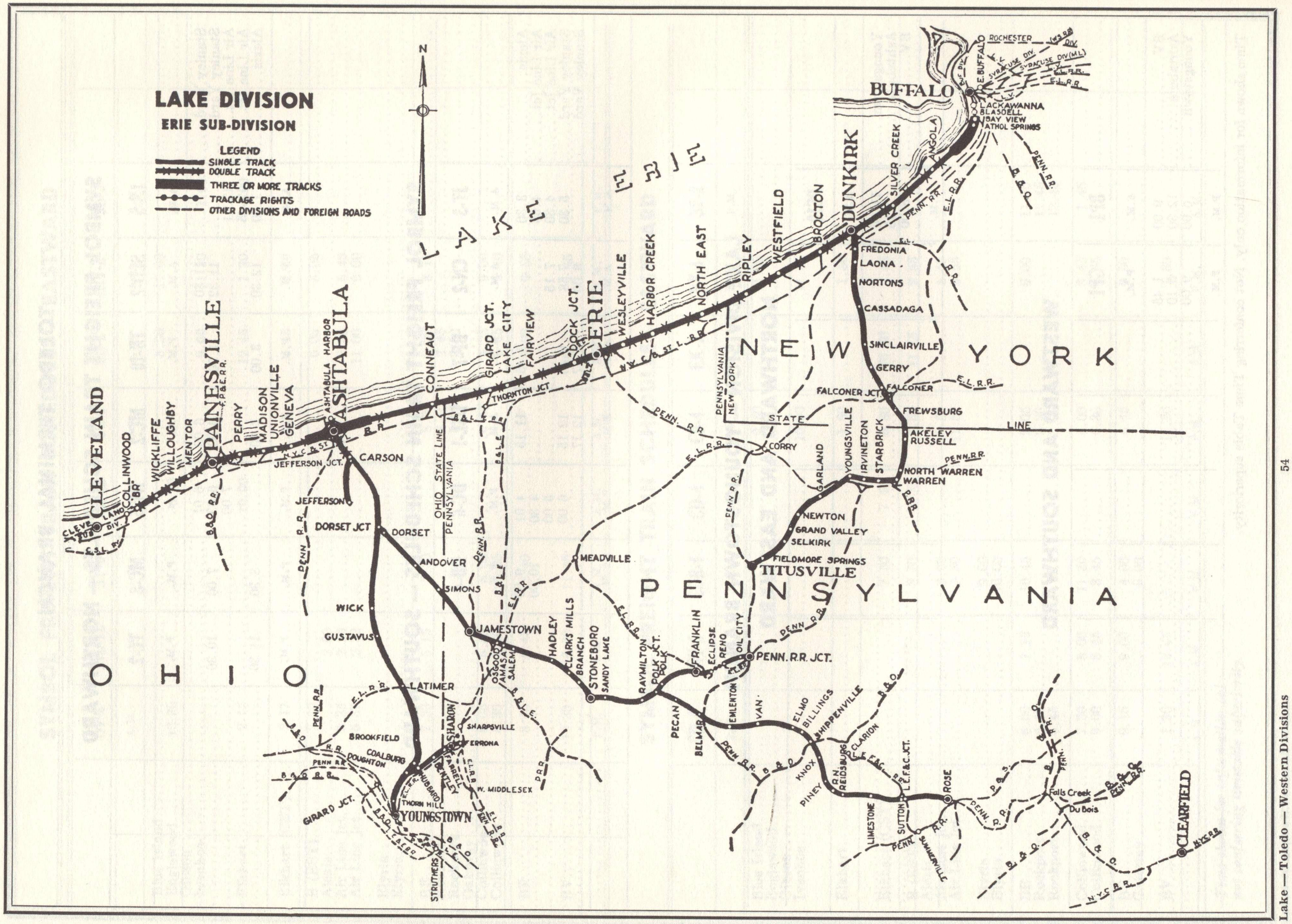
LAKE DIVISION
ERIE SUB-DIVISION
LEGEND
SINGLE TRACK
DOUBLE TRACK
THREE OR MORE TRACKS
TRACKAGE RIGHTS
OTHER DIVISIONS AND FOREIGN ROADS
N
LAKE ERIE
OHIO
PENNSYLVANIA
NEW YORK
STATE LINE
CLEVELAND
COLLINWOOD
WICKLIFFE
WILLOUGHBY
MENTOR
PAINESVILLE
PERRY
MADISON
UNIONVILLE
GENEVA
ASHTABULA HARBOR
ASHTABULA
CONNEAUT
GIRARD JCT.
LAKE CITY
FAIRVIEW
DOCK JCT.
ERIE
WESLEYVILLE
HARBOR CREEK
NORTH EAST
RIPLEY
WESTFIELD
BROCTON
DUNKIRK
SILVER CREEK
ANGOLA
BUFFALO
E. BUFFALO
ROCHESTER
LACKAWANNA
BLASDELL
BAY VIEW
ATHOL SPRINGS
FREDONIA
LAONA
NORTONS
CASSADAGA
SINCLAIRVILLE
GERRY
FALCONER JCT.
FALCONER
FREWSBURG
AKELEY
RUSSELL
NORTH WARREN
WARREN
STARBRICK
IRVINETON
YOUNGSVILLE
GARLAND
CORRY
NEWTON
GRAND VALLEY
SELKIRK
FIELDMORE SPRINGS
TITUSVILLE
PENNSYLVANIA
NEW YORK
THORNTON JCT
JEFFERSON JCT.
CARSON
JEFFERSON
DORSET JCT
DORSET
ANDOVER
SIMONS
WICK
GUSTAVUS
LATIMER
JAMESTOWN
OSGOOD
AMASA
SALEM
HADLEY
CLARKS MILLS
BRANCH
STONEBORO
SANDY LAKE
RAYMILTON
POLK JCT.
POLK
FRANKLIN
ECLIPSE
RENO
OIL CITY
PENN. R.R. JCT.
MEADVILLE
PECAN
BELMAR
EMLENTON
VAN
ELMO
BILLINGS
SHIPPENVILLE
CLARION
KNOX
PINEY
R.N.
REIDSBURG
LIMESTONE
SUTTON
L.E.F.&C. JCT.
ROSE
SUMMERVILLE
Falls Creek
Du Bois
CLEARFIELD
BROOKFIELD
COALBURG
DOUGHTON
SHARON
SHARPSVILLE
FERRONA
FARRELL
BENTLEY
HUBBARD
THORN HILL
YOUNGSTOWN
W. MIDDLESEX
GIRARD JCT.
STRUTHERS
OHIO STATE LINE
PENNSYLVANIA
PENN. R.R.
E.L.R.R.
B.&O.
N.Y.C.R.R.
P.R.R.
B.&L.E.
C.S.L.R.R.
P.&E.R.R.
N.Y.C.&ST.L.R.R.
PENNSYLVANIA
NEW YORK



LAKE DIVISION

CLEVELAND SUB-DIVISION

- SINGLE TRACK
- DOUBLE TRACK
- THREE OR MORE TRACKS
- TRACKAGE RIGHTS
- C.U.T. TRACKAGE RIGHTS
- OTHER SUB-DIVISIONS, DIVISIONS AND FOREIGN ROADS

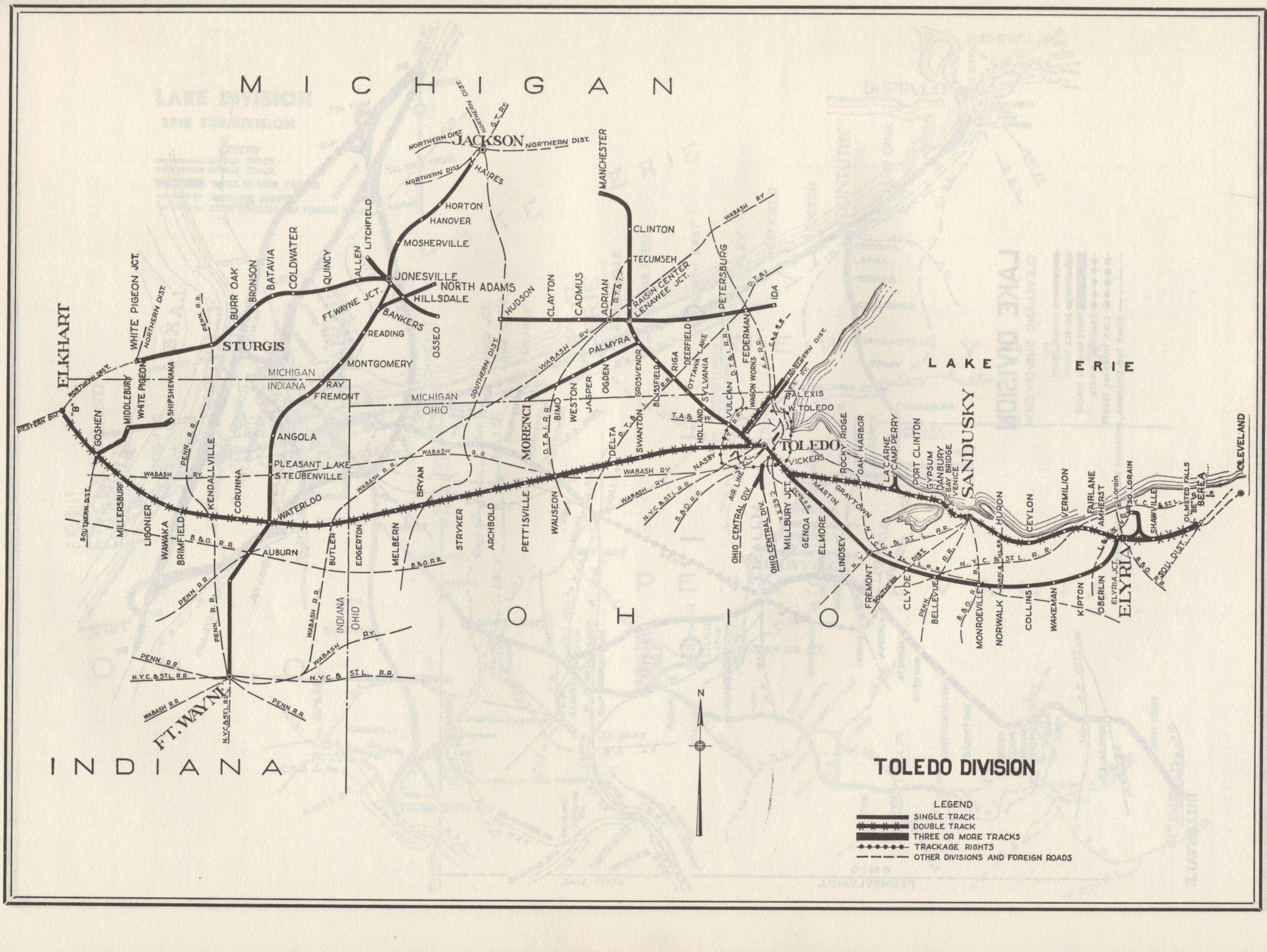
MICHIGAN
INDIANA
OHIO
LAKE ERIE
JACKSON
NORTHERN DIST.
G.T.R.R.
HAIRES
HORTON
HANOVER
MOSHERVILLE
JONESVILLE
NORTH ADAMS
HILLSDALE
LITCHFIELD
ALLEN
QUINCY
COLDWATER
BATAVIA
BRONSON
BURR OAK
WHITE PIGEON JCT.
WHITE PIGEON
ELKHART
STURGIS
FT. WAYNE JCT.
BANKERS
READING
OSSEO
MONTGOMERY
RAY
FREMONT
ANGOLA
PLEASANT LAKE
STEUBENVILLE
WATERLOO
AUBURN
BUTLER
EDGERTON
MELBERN
BRYAN
STRYKER
ARCHBOLD
PETTISVILLE
WAUSEON
MORENCI
BIMO
WESTON
JASPER
OGDEN
PALMYRA
GROSVENOR
SWANTON
DELTA
HOLLAND
WASHINGTON
TOLEDO
VICKERS
NASBY
AIR LINE JCT.
OHIO CENTRAL DIV.
MILLBURY JCT.
GENOA
ELMORE
LINDSEY
MARTIN
GRAYTOWN
ROCKY RIDGE
OAK HARBOR
LACARNE
CAMP PERRY
PORT CLINTON
GYPSUM
DANBURY
BAY BRIDGE
VENICE
SANDUSKY
HURON
CEYLON
VERMILION
FAIRLANE
AMHERST
Lorain
LORAIN
SHAWVILLE
OLMSTED FALLS
"BE"
BEREA
CLEVELAND
ELYRIA JCT.
ELYRIA
KIPTON
OBERLIN
WAKEMAN
COLLINS
NORWALK
MONROEVILLE
BELLEVUE
CLYDE
FREMONT
SOUTHERN
LAKE SHORE DIST.
N.Y.C. & ST. L. R.R.
B. & O. R.R.
PENN. R.R.
WABASH RY.
WABASH R.R.
T. A. & A.
T. & O. C. R.R.
D. T. & I. R.R.
D. T. & I.
D. T. & I. R.R.
O. C. R.R.
P. S. RY.
A. A. R.R.
C. & E. R.R.
L. S. & M. S. R.R.
T. & O. C. R.R.
B. & O. R.R.
B. & O. R.R. "BE" DIV.
B. & O. S. DIV.
N.Y.C. & ST. L. R.R.
PENN. R.R.
WABASH R.R.
FT. WAYNE
SOUTHERN DIST.
NORTHERN DIST.
WESTERN DIV.
"B"
GOSHEN
MIDDLEBURY
SHIPSHEWANA
MILLERSBURG
LIGONIER
WAWAKA
BRIMFIELD
KENDALLVILLE
CORUNNA
TECUMSEH
CLINTON
MANCHESTER
RAISIN CENTER
LENAWEE JCT.
ADRIAN
CADMUS
CLAYTON
HUDSON
PETERSBURG
IDA
DEERFIELD
RIGA
BLISSFIELD
OTTAWA LAKE
SYLVANIA
VULCAN
WASON WORKS
FEDERMAN
ALEXIS
W. TOLEDO
WABASH RY.
SOUTHERN DIST.
NORTHERN DIST.
PENN. R.R.
WABASH R.R.
B. & O. R.R.
N.Y.C. & ST. L. R.R.
PENN. R.R.
WABASH R.R.
INDIANA
OHIO
WABASH RY.
N.Y.C. & ST. L. R.R.
PENN. R.R.
WABASH R.R.
FT. WAYNE
N.Y.C. & ST. L. R.R.
PENN. R.R.
N
TOLEDO DIVISION
LEGEND
SINGLE TRACK
DOUBLE TRACK
THREE OR MORE TRACKS
TRACKAGE RIGHTS
OTHER DIVISIONS AND FOREIGN ROADS

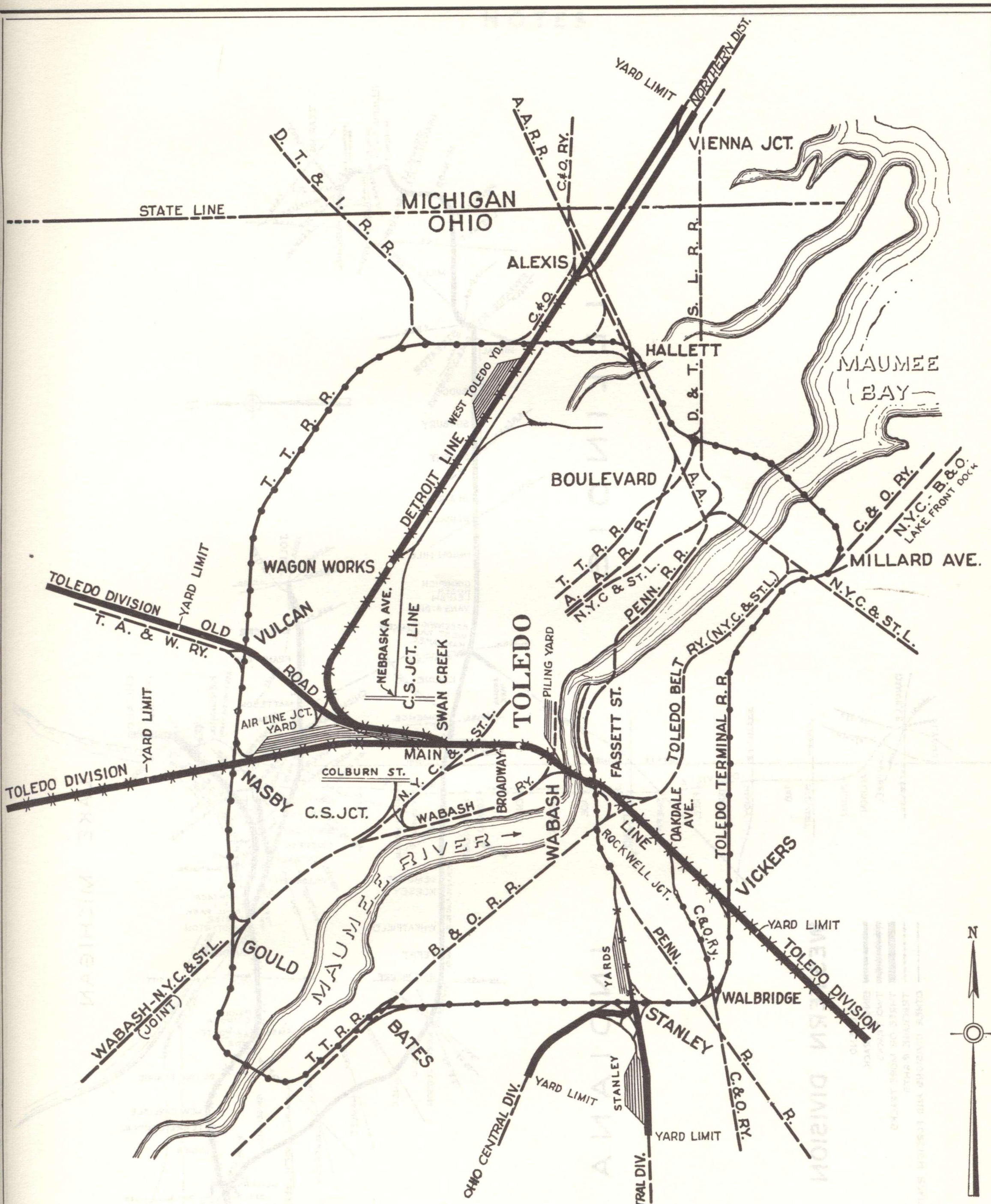

TOLEDO TERMINAL SUBDIVISION

LEGEND

- SINGLE TRACK
- DOUBLE TRACK
- THREE OR MORE TRACKS
- FOREIGN ROADS AND OTHER DIVISIONS
- TRACKAGE RIGHTS


LAKE MICHIGAN
ILLINOIS
INDIANA
N
CHICAGO
ENGLEWOOD JCT.
KENSINGTON
KENSINGTON YARD
WHITING
INDIANA HARBOR
GARY
MILLERS
DUNE PARK
PORTAGE
DUNE PARK
PORTER
CHESTERTON
BURDICK
MICHIGAN CITY
OTIS
PINOLA
E. PINOLA
LA PORTE
WA
ROLLING PRAIRIE
NEW CARLISLE
TERRE COUPEE
LYDICK
NILES
SOUTH BEND
MICHIGAN
INDIANA
ELKHART
NORTHERN DISTRICT
TOLEDO DIVN.
RUPEL
OLIVER
MISHAWAKA
OSCEOLA
WG
GINGER HILL
NORTH LIBERTY
WALKERTON
HAMLET
KNOX
TOTO
NORTH JUDSON
SAN PIERRE
TEFFT
WHEATFIELD
DEMOTTE
KERSEY
SHELBY
NORTH HAYDEN
BELSHAW
SCHNEIDER
COOK
ILLINOIS
EDGETOWN
DELMAR
MOMENCE
EXLINE
BRADLEY
GREENWICH
WEST KANKAKEE
KANKAKEE
VANS SIDING
GOODRICH
HUBER
LEHIGH
UNION HILL
BLAIR
REDDICK
DWIGHT
SUNBURY
BUDDING
G.M.&O. CROSSING
STREATOR
MILLA
MC NABB
GRANVILLE
GRANVILLE JCT.
PRISCILLA
LOSTANT
MISSAL
STREATOR JCT.
DEPUE
ILLINOIS RIVER
MORONTS
DEPUE JCT.
HOWE
ZEARING
N.Y.C. JCT.
LADD JCT.
CHURCHILL
SEATONVILLE JCT.
SEATONVILLE
JOLIET
SPENCER
FRANKFORT
MATTESON
JOLIET SUB-DIVN.
CHICAGO HEIGHTS
CALUMET PARK
HAMMOND
GIBSON
HIGHLAND
HAYS
DYER
HARTSDALE
ST. JOHN
GRIFFITH
CROSS
SOUTH GARY
LIVERPOOL
EAST GARY
WILLOW CREEK
LAKE VILLAGE
CONRAD
AROMA PARK
ENOS
MOROCCO
ADE
KENTLAND
SHEFF
FREE
DUNN
HANDY
TAB
STEWART
SLOAN
ALLISON
CAMPBELL
DANVILLE
LYONS
STATE LINE
INDIANA DIVISION
DANVILLE
KANKAKEE SUB-DIVISION
WESTERN DIVISION
LEGEND
SINGLE TRACK
TWO TRACKS
THREE OR MORE TRACKS
TRACKAGE RIGHTS
OTHER DIVISIONS AND FOREIGN ROADS

SPEED TABLE

NOTE.—This table is for information only and does not authorize exceeding speed limitations of special instructions or however issued.

Time per Mile	Miles per Hour	Time per Mile	Miles per Hour	Time per Mile	Miles per Hour	Time per Mile	Miles per Hour
0 min. 36 sec.	100.00	0 min. 50 sec.	72.00	1 min. 5 sec.	55.38	2 min. 0 sec.	30.00
0 " 40 "	90.00	0 " 51 "	70.59	1 " 10 "	51.43	2 " 10 "	27.69
0 " 41 "	87.80	0 " 52 "	69.23	1 " 15 "	48.00	2 " 20 "	25.71
0 " 42 "	85.71	0 " 53 "	67.92	1 " 20 "	45.00	2 " 30 "	24.00
0 " 43 "	83.72	0 " 54 "	66.67	1 " 25 "	42.35	2 " 40 "	22.50
0 " 44 "	81.82	0 " 55 "	65.45	1 " 30 "	40.00	2 " 50 "	21.18
0 " 45 "	80.00	0 " 56 "	64.29	1 " 35 "	37.89	3 " 0 "	20.00
0 " 46 "	78.26	0 " 57 "	63.16	1 " 40 "	36.00	3 " 30 "	17.14
0 " 47 "	76.60	0 " 58 "	62.07	1 " 45 "	34.29	4 " 0 "	15.00
0 " 48 "	75.00	0 " 59 "	61.02	1 " 50 "	32.73	5 " 0 "	12.00
0 " 49 "	73.47	1 " 0 "	60.00	1 " 55 "	31.30	6 " 0 "	10.00

OPERATION SUNSET
PROTECTED CONNECTIONS PAY OFF — LET'S ROLL AS ADVERTISED

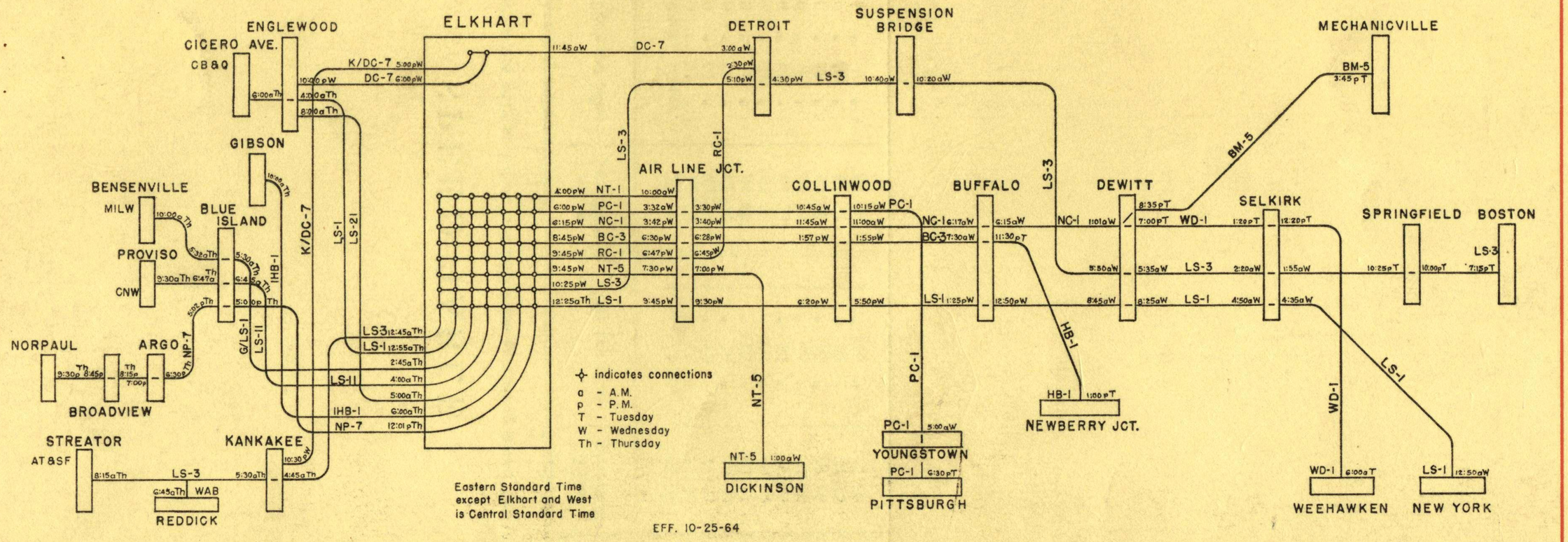

EFF. 10-25-64